Schematic Circuit Diagram

MODEL 150-B RADIO TRANSMITTING EQUIPMENT

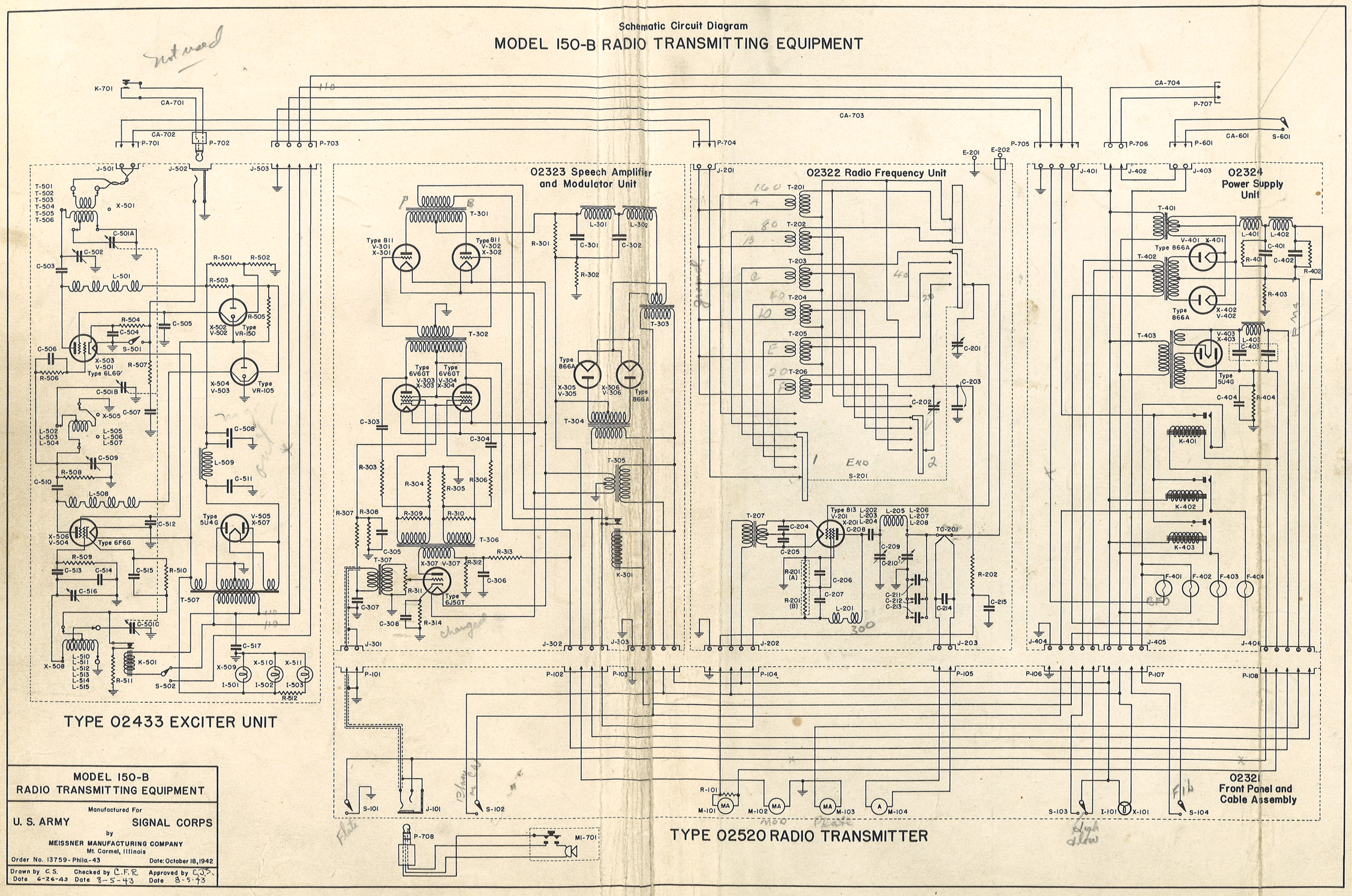

MODEL 150-B RADIO TRANSMITTING EQUIPMENT	
Manufactured For U. S. ARMY SIGNAL CORPS by MEISSNER MANUFACTURING COMPANY Mt. Carmel, Illinois	
Order No. 13759-Philo.-43	Date: October 18, 1942
Drawn by C.S. Date 6-26-43	Checked by C.F.R. Date 8-5-43 / Approved by C.J.S. Date 8-5-43