Chasing Readout Holes

Sergei Avvakumov

8th July 2004

This is a practical guide to debugging/fixing the Far Detector readout electronics by using (mostly) Online Monitoring plots. Please try following this guide - let me know in case you reach a "dead end".

First, let's define what a "readout hole" is. Readout hole is a chip(or chips) on the "VARC Hit Map, post-trigger" plot, that shows no hits or anomalusly low number of hits - less than 1/3 of the number of hits in its neighbors. Such chips are shown as blank or dark blue-purple spots on the colorful hit map plot.

1 Start here

First look at "VARC Hit Map, post-trigger hits" plot and identify the FEE "spot" affected. Also look at the "LI Hit Map East(West)" plot and identify the affected planes.

1. One VA chip affected - continue to section 2
2. A whole VFB (three chips) is affected - continue to section 3

2 Single Chip problems

Single chip problems usually point to a problem with one of the:

1. VA chip itself
2. Base
3. PMT

It is also possible that a single chip problem is caused by a faulty control cable or by a VFB defect, but it is less likely, because such problems usually affect all three chips on the VFB.

In order to find out if the VA chip itself is good - look at the "CI gain by channel" plot of the affected crate. If you see

1. All CI gains on the affected chip look ok (>100) - it means that the problem is "upstream"[1]of the VA chip/VFB - continue to section 2.1
2. CI gains of the channels 2-17 (square in the central part of the cell on the "CI gain by channel" plot) are much lower than normal, but the gains of channels 0-1 and 18-21 are ok - this is a red flag for bad PMT base - continue to section 2.2
3. No CI gains are calculated for this chip - it is empty on the plot. It means that the problem is "downstream" from the VA chip - most likely this VA chip itself is bad - continue to section 2.3

2.1 Problem "upstream" of VA chip

Problem is most likely "upstream" of the VFB/VA chip - it's in the MUX box, it could be a problem with HV, PMT base or the PMT itself. These type of problems require some "manual" debugging. Do the following:

1. first, make sure that the VFB is properly seated on the MUX box
2. unplug the HV cable, corresponding to a problem chip/PMT and measure the HV using a digital voltmeter (use 1:100 voltage divider box); if the measured HV is not correct (correct HV settings are written on the MUX box) - proceed to debug HV problem

[1]Usage of words "upstream" and "downstream" in this note can be readily understood if one thinks about the "data flow" that starts in the detector modules and follows to the MUX boxes->VFB's->VARC's->DAQ.

3. turn off HV, unplug the front end board (measurement of C4-R21 resistance will not be correct if the front end board is plugged and the cables are hooked up), open the MUX box - check all the cable connections inside the MUX box. Measure resistance across C4-R21 junction on the base - nominal resistance is 10k, lower values (~1-2k or less) indicate base problem, in that case, proceed with the base replacement

4. close the MUX box and proceed with the debugging using the scope and the Indiana board, follow Mike Kordosky's FEE guide

5. in case you can not find the problem - contact Mike or Sergei

2.2 "Standard" bad base

If the CI gain plot shows that the gains of channels 2-17 are much lower than normal - it's a "signature" of the shot C4 capacitor on the PMT base.

1. Turn off HV, unplug the front end board (measurement of C4-R21 resistance will not be correct if the front end board is plugged and the cables are hooked up), open the MUX box

2. Measure resistance across C4-R21 junction - nominal resistance is 10k, lower values (~1-2k or less) confirm that it's the C4 cap.

3. If you measured low resistance - proceed with the base replacement, if you measured 10k - contact Mike K

2.3 Bad VA chip

In case calculation of the CI gains failed for a particular VA chip (plot is empty) - it means that the problem is "downstream" of the VFB/VA chip,

most likely it is just a faulty chip.

1. Check that VFB is properly seated, all the cables are aligned and attached correctly

2. Check voltages on the VA chip - there is an arrow on the VA chip and two double rows of pins; "pin one's" are on the arrow side of each row - measure the voltages on all "pin one's" - they should be $\pm 2.5\,V$ with a $0.3\,V$ tolerance; compare the measurements of the suspected problem chip with the other two chips on the board - in case all voltages are incorrect - proceed with replacing the VFB, if the voltages on only one chip are incorrect - proceed with replacing this chip[2]

3. If all the voltages measured in the previous step are correct - the first fix attempt is to replace the suspected VA chip

4. Take pedestal and VADrift runs and check the CI gain plot again - if it looks ok, you are done

5. In case the problem is still there - "undo" step 2 (or 3) and put the old VA chip back; the next possibility is damaged control cable

6. Swap control and signal cables between two adjacent VFB's as described in Section 4.1. If the problem DID NOT MOVE - it's the control cable, proceed with replacing it. If the problem MOVED - it's the VFB - proceed with replacing it

3 Three Chip (VFB) problems

Problems affecting all three chips on a certain VFB are most likely caused by either problem with the VFB itself or by a bad control cable.

1. remove the dust cover from the VFB - measure the input voltage on both sides of two fuses - voltages should measure $\pm 4.7 - 5.0\,V$, a large voltage drop ($> 0.2 - 0.3\,V$) on either of the fuses indicates that the fuse is broken - in this case replace the fuse; if you are measuring wrong voltage - check the low voltage power supply at the bottom of the VME rack - all the LED's should be orange - if you see green or red LED - it means that this channel is bad - move the VFB power cable to a different LV output port

[2] If you unplugged VFB power cable or otherwise shut off power to the VFB and then repowered it a pedestal run needs to be taken before the voltages can be measured

2. check that the VFB is properly seated and all the cables are aligned and attached correctly

3. if the voltages are ok and all cables are good - replace the VFB

4. take pedestal and VADrift runs and check if the problem is still there - if all CI gains are ok - it's fixed

5. if the problem is still there - it is possibly the control cable , put the VFB, that you removed in the previous step back

6. Swap control and signal cables between two adjacent VFB's as described in Section 4.1. If the problem DID NOT MOVE - it's the control cable, proceed with replacing it. If the problem MOVED - it's the VFB - proceed with replacing it (if you already tried swapping VFB during step 3 and it hasn't fixed the problem - contact Mike, Sergei)

7. If the problem did not move during the previous test, you've replaced the control cable, but the problem is still there - it might be with the VMM or VARC.

8. Swap control and signal cables between two VARCs as described in Section 4.2. If the problem still hasn't moved - it must be in the VMM/VARC - contact Nathan Felt

4 Appendix: Cable Swapping

Swapping the control and signal cables between two adjacent VFB's or two VARC slots is a common trick that can help to find out where the problem lies in the readout chain. The two possibilities of such swap are explained in the following sections.

4.1 Swapping cables at the MUX box end

Swapping cables at the MUX box end can help to find out if the problem is with the VA chip (or VFB itself) or with the control cable (signal cables proved to be much more reliable). Let's consider an example of debugging a single chip hole in the readout of MUX box 1 in Figure 1. When you are not

sure if the problem is caused by VA chip/VFB or by the cable you can swap the control and signal cables from VFB sitting on MUX box 1 with a VFB on the adjacent MUX box 2. Before you do the swap, make sure that there are no problems/holes in MUX box 2 readout by looking at the "VARC hit map post-trigger" plot - check that the channels corresponding MUX box 2 are ok. After the swap is completed take pedestal, VADrift runs and a fifteen minute long physics run, then check the Online plots again. There are two possibilities:

1. **Problem is with the VA chip/VFB on MUX box 1**. After the cable swap the problem VFB is being read out by the channel of electronics corresponding to MUX box 2 - so you should see that the problem MOVED in the Online plots. So that's the first rule - if the problem MOVED when the cables have been swapped at the MUX box end - it means the problem is with the VA chip/VFB and NOT with the cable.

2. **Problem is with the control cable connected to the VFB on MUX box 1.** After the cable swap the bad cable is still connected to the same spot on the VARC card, so you should see a problem in the SAME spot in the Online plots. And the second rule is - if the problem stayed at the SAME place when cables have been swapped at the MUX box end - it means that the problem is with the cable, NOT the VFB.

4.2 Swapping cables at the VARC end

Swapping cables at the VARC end can help to find out if the problem is "upstream" of the VMM/VARC or with the VMM/VARC itself. An example is shown in Figure 2 - let's say that there is a problem with the readout from MUX box 1 and you suspect that it might be caused by the VMM or VARC 1 itself. Then you can try to swap control and signal cables from MUX box 1 with control and signal cables from MUX box 2 that are being readout by a different VARC in the same VME crate. It is important to swap cables between two different VARC's with one of them known to be good - in our example VARC 2 has to be good, so again, before you do the swap, make sure that there are no problems/holes in MUX box 2/VARC 2 readout by looking at the "VARC hit map post-trigger" plot - check that the channels

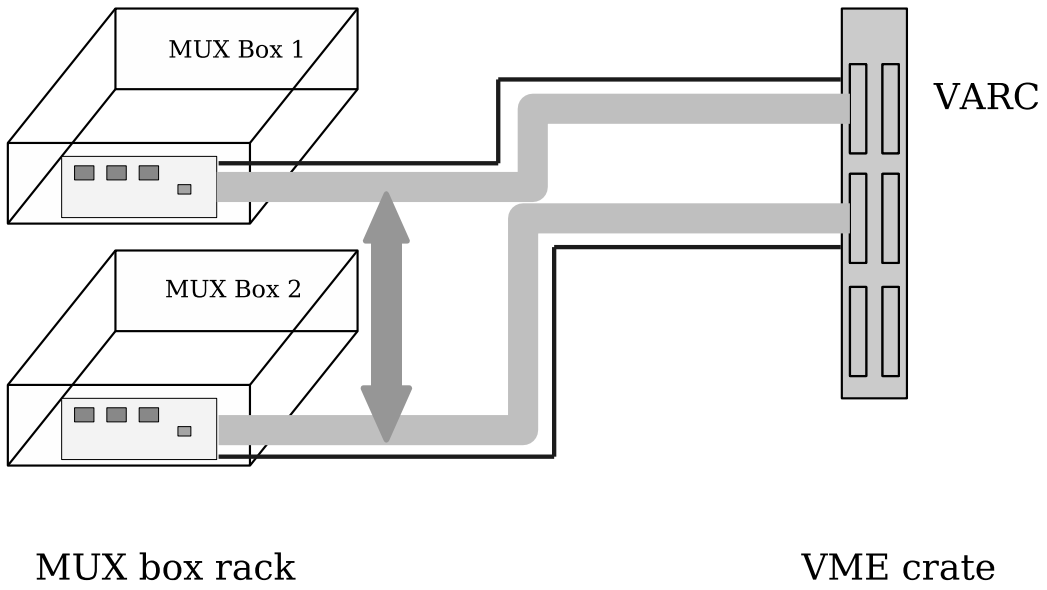

Figure 1: Swapping control and signal cables at the MUX box end

corresponding MUX box 2 are ok. After the swap is completed take pedestal, VADrift runs and a fifteen minute long physics run, then check the Online plots again. There are two possibilities:

1. **Problem is "upstream" of VARC 1.** After the cable swap the problem is being read out by VARC 2 - so you should see that the problem MOVED in the Online plots. So if the problem MOVED when the cables have been swapped at the VARC end - it means the problem is NOT in VARC 1, it's "upstream".

2. **Problem is with VARC 1(or with the VMM in it).** In this case the cable swap doesn't change anything, so you should see a problem in the SAME spot in the Online plots. So if the problem stayed at the SAME place when cables have been swapped at the VARC end - it means that the problem is with the VARC (or with the VMM in it).

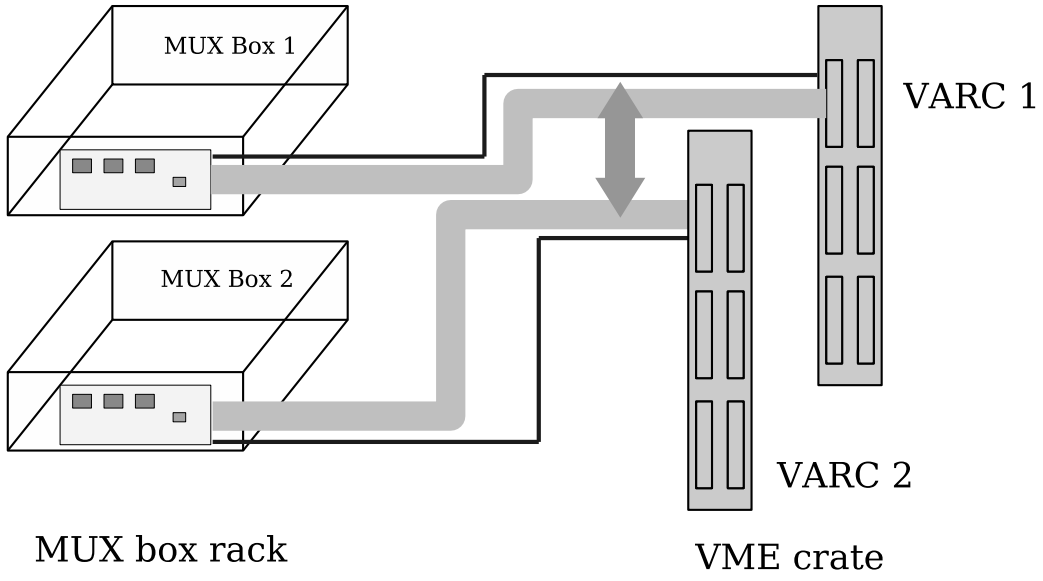

Figure 2: Swapping control and signal cables at the VARC end