POWER IN

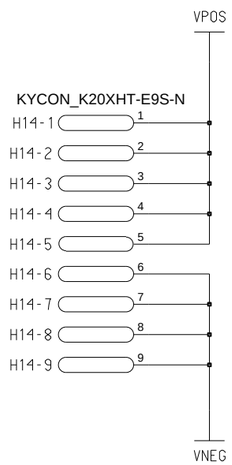

GROUND ISOLATION

To isolate DGND and AGND remove R00

SVI POWER

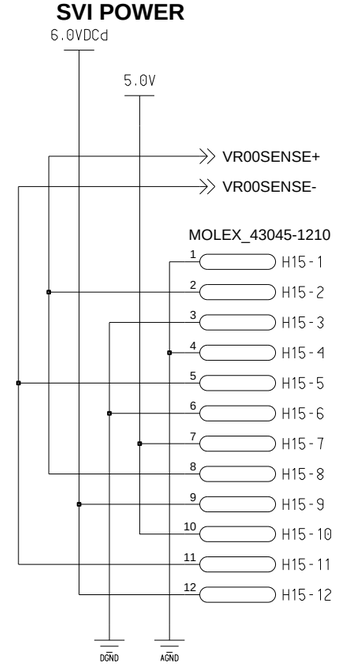

STAC 1-4 POWER

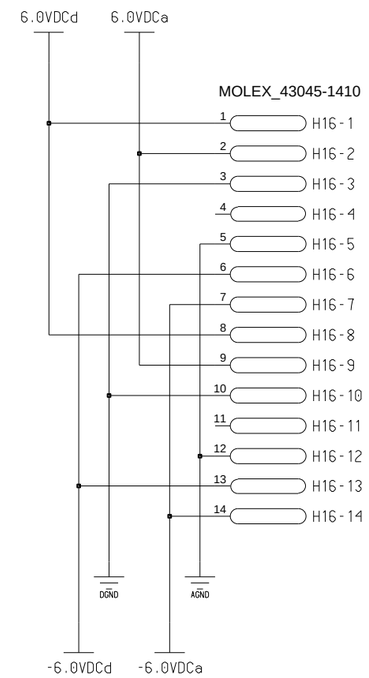

STAC 5-8 POWER

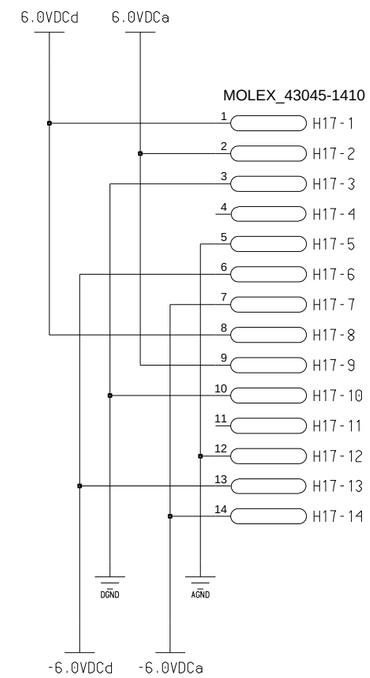

NOTE: STAC power is split to allow use of 24 AWG cable

CRESTBUS PASSTHROUGH

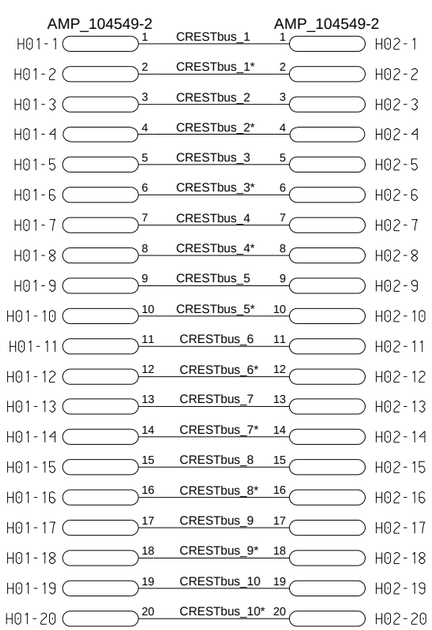

VOLTBUS PASSTHROUGH

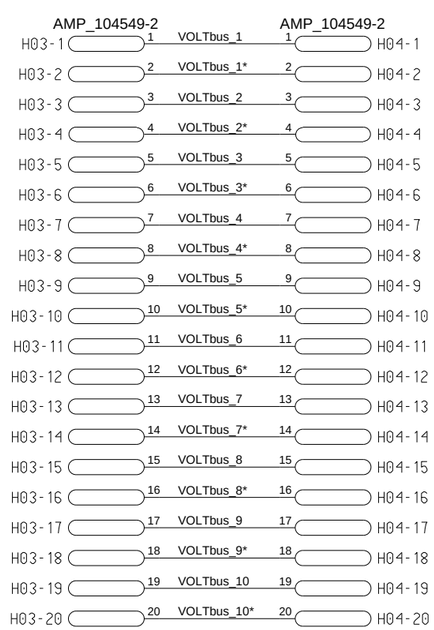

POWER INDICATOR LEDS

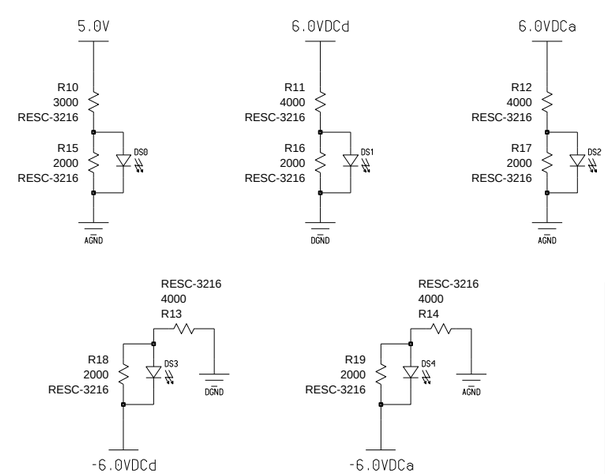

NOTE: DS0-DS4 should be disabled for flight by removing R46-R50

End Cap Board		
CRESTBus and VOLTBus passthrough, power headers and indicator LEDs		
Rev	**Designed By**	**Saved Date**
A	Andrew Reiman	Wednesday, September 5, 2007
University of Michigan	**Physics**	Sheet 1 of 4

STAC-SIDE VETOBUS

AMP

AC_SPARE01	1	H3-1
AC_SPARE02	2	H3-2
VETO_GO*	3	H3-3
VETO_GO	4	H3-4
AC_SPARE05	5	H3-5
AC_SPARE06	6	H3-6
VETO_1HIT*	7	H3-7
VETO_1HIT	8	H3-8
AC_SPARE09	9	H3-9
AC_SPARE10	10	H3-10
VETO_MULTIHIT*	11	H3-11
VETO_MULTIHIT	12	H3-12
AC_SPARE13	13	H3-13
AC_SPARE14	14	H3-14
VETO_CLK*	15	H3-15
VETO_CLK	16	H3-16
	17	H3-17
	18	H3-18
AC_SPARE19	19	H3-19
AC_SPARE20	20	H3-20

STAC 1 VETOBUS

AMP_104549-2

H05-1	1	STAC_1_VR01SENSE_A-
H05-2	2	STAC_1_VR02SENSE_A+
H05-3	3	STAC_1_DIGITIZE
H05-4	4	STAC_1_DIGITIZE*
H05-5	5	STAC_1_VR01SENSE_A+
H05-6	6	STAC_1_VR02SENSE_A-
H05-7	7	STAC_1_SINGLE
H05-8	8	STAC_1_SINGLE*
H05-9	9	
H05-10	10	
H05-11	11	STAC_1_MULTI
H05-12	12	STAC_1_MULTI*
H05-13	13	
H05-14	14	
H05-15	15	STAC_1_CLK
H05-16	16	STAC_1_CLK*
H05-17	17	STAC_1_VR01SENSE_D-
H05-18	18	STAC_1_VR02SENSE_D+
H05-19	19	STAC_1_VR01SENSE_D+
H05-20	20	STAC_1_VR02SENSE_D-

STAC 2 VETOBUS

AMP_104549-2

H06-1	1	
H06-2	2	
H06-3	3	STAC_2_DIGITIZE
H06-4	4	STAC_2_DIGITIZE*
H06-5	5	
H06-6	6	
H06-7	7	STAC_2_SINGLE
H06-8	8	STAC_2_SINGLE*
H06-9	9	
H06-10	10	
H06-11	11	STAC_2_MULTI
H06-12	12	STAC_2_MULTI*
H06-13	13	
H06-14	14	
H06-15	15	STAC_2_CLK
H06-16	16	STAC_2_CLK*
H06-17	17	
H06-18	18	
H06-19	19	
H06-20	20	

STAC 3 VETOBUS

AMP_104549-2

H07-1	1	
H07-2	2	
H07-3	3	STAC_3_DIGITIZE
H07-4	4	STAC_3_DIGITIZE*
H07-5	5	
H07-6	6	
H07-7	7	STAC_3_SINGLE
H07-8	8	STAC_3_SINGLE*
H07-9	9	
H07-10	10	
H07-11	11	STAC_3_MULTI
H07-12	12	STAC_3_MULTI*
H07-13	13	
H07-14	14	
H07-15	15	STAC_3_CLK
H07-16	16	STAC_3_CLK*
H07-17	17	
H07-18	18	
H07-19	19	
H07-20	20	

STAC 4 VETOBUS

AMP_104549-2

H08-1	1	
H08-2	2	
H08-3	3	STAC_4_DIGITIZE
H08-4	4	STAC_4_DIGITIZE*
H08-5	5	
H08-6	6	
H08-7	7	STAC_4_SINGLE
H08-8	8	STAC_4_SINGLE*
H08-9	9	
H08-10	10	
H08-11	11	STAC_4_MULTI
H08-12	12	STAC_4_MULTI*
H08-13	13	
H08-14	14	
H08-15	15	STAC_4_CLK
H08-16	16	STAC_4_CLK*
H08-17	17	
H08-18	18	
H08-19	19	
H08-20	20	

STAC 5 VETOBUS

AMP_104549-2

H09-1	1	
H09-2	2	
H09-3	3	STAC_5_DIGITIZE
H09-4	4	STAC_5_DIGITIZE*
H09-5	5	
H09-6	6	
H09-7	7	STAC_5_SINGLE
H09-8	8	STAC_5_SINGLE*
H09-9	9	
H09-10	10	
H09-11	11	STAC_5_MULTI
H09-12	12	STAC_5_MULTI*
H09-13	13	
H09-14	14	
H09-15	15	STAC_5_CLK
H09-16	16	STAC_5_CLK*
H09-17	17	
H09-18	18	
H09-19	19	
H09-20	20	

STAC 6 VETOBUS

AMP_104549-2

H10-1	1	
H10-2	2	
H10-3	3	STAC_6_DIGITIZE
H10-4	4	STAC_6_DIGITIZE*
H10-5	5	
H10-6	6	
H10-7	7	STAC_6_SINGLE
H10-8	8	STAC_6_SINGLE*
H10-9	9	
H10-10	10	
H10-11	11	STAC_6_MULTI
H10-12	12	STAC_6_MULTI*
H10-13	13	
H10-14	14	
H10-15	15	STAC_6_CLK
H10-16	16	STAC_6_CLK*
H10-17	17	
H10-18	18	
H10-19	19	
H10-20	20	

STAC 7 VETOBUS

AMP_104549-2

H11-1	1	
H11-2	2	
H11-3	3	STAC_7_DIGITIZE
H11-4	4	STAC_7_DIGITIZE*
H11-5	5	
H11-6	6	
H11-7	7	STAC_7_SINGLE
H11-8	8	STAC_7_SINGLE*
H11-9	9	
H11-10	10	
H11-11	11	STAC_7_MULTI
H11-12	12	STAC_7_MULTI*
H11-13	13	
H11-14	14	
H11-15	15	STAC_7_CLK
H11-16	16	STAC_7_CLK*
H11-17	17	
H11-18	18	
H11-19	19	
H11-20	20	

STAC 8 VETOBUS

AMP_104549-2

H12-1	1	STAC_8_VR01SENSE_A-
H12-2	2	STAC_8_VR02SENSE_A+
H12-3	3	STAC_8_DIGITIZE
H12-4	4	STAC_8_DIGITIZE*
H12-5	5	STAC_8_VR01SENSE_A+
H12-6	6	STAC_8_VR02SENSE_A-
H12-7	7	STAC_8_SINGLE
H12-8	8	STAC_8_SINGLE*
H12-9	9	
H12-10	10	
H12-11	11	STAC_8_MULTI
H12-12	12	STAC_8_MULTI*
H12-13	13	
H12-14	14	
H12-15	15	STAC_8_CLK
H12-16	16	STAC_8_CLK*
H12-17	17	STAC_8_VR01SENSE_D-
H12-18	18	STAC_8_VR02SENSE_D+
H12-19	19	STAC_8_VR01SENSE_D+
H12-20	20	STAC_8_VR02SENSE_D-

End Cap Board

VETOBus to STAC and remote voltage sensing

Rev	Designed By	Saved Date
A	Andrew Reiman	Wednesday, September 5, 2007

University of Michigan **Physics** Sheet 2 of 4

SIGNAL-POWER RAIL CORRESPONDANCE

Signal	Power Rail
VR01SENSE_D+	6.0VDCd
VR01SENSE_D-	DGND
VR01SENSE_A+	6.0VDCa
VR01SENSE_A-	AGND
VR02SENSE_D+	DGND
VR02SENSE_D-	-6.0VDCd
VR02SENSE_A+	AGND
VR02SENSE_A-	-6.0VDCa

REMOTE SENSE CONNECTIONS

Connections to be made on STAC if remote sense is enabled

Pin on STAC	STAC Power Rail
H13-1	AGND
H13-2	AGND
H13-5	6.0VDCa
H13-6	-6.0VDCa
H13-15	6.0VDC
H13-16	-6.0VDC

NOTE: STAC pins H06-17 and H06-18 are already connected to GROUND.

VOLTBUS TO XEM CARRIER

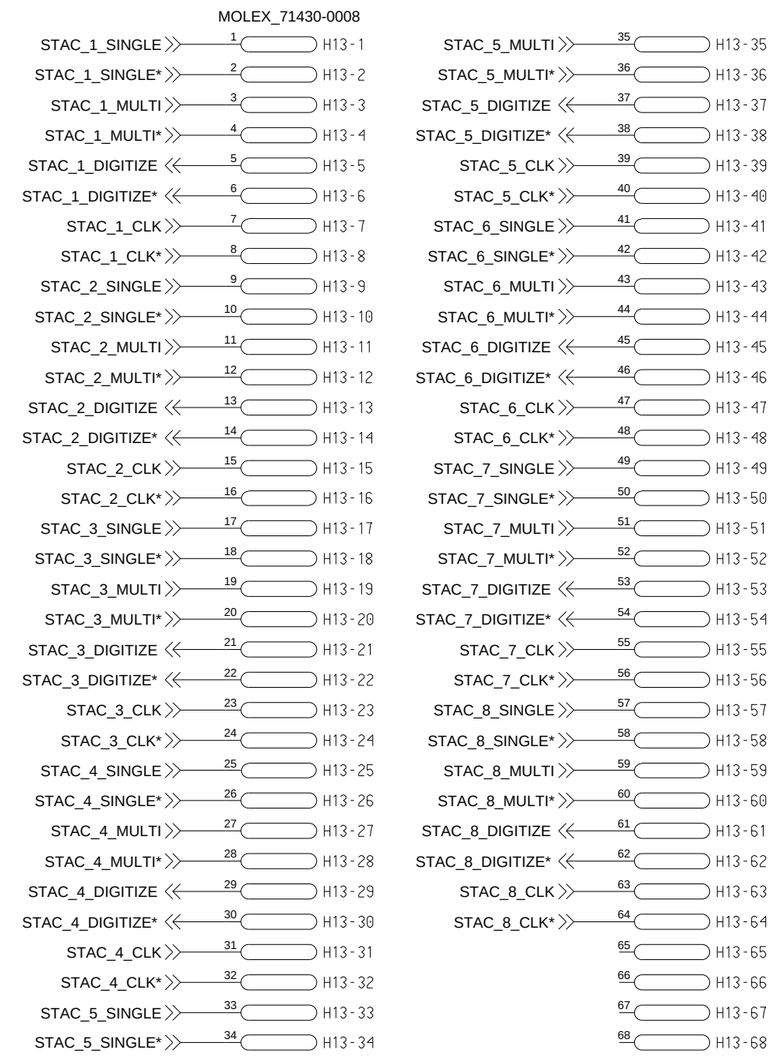

VOLTAGE REGULATOR FEEDBACK SELECT

R20-R23 and R32-R35 selects local sensing. Remaining resistors enable sensing from STAC 1 or STAC 8.
R20-R31 should be used on a digital board. R32-R43 should be used on an analog board

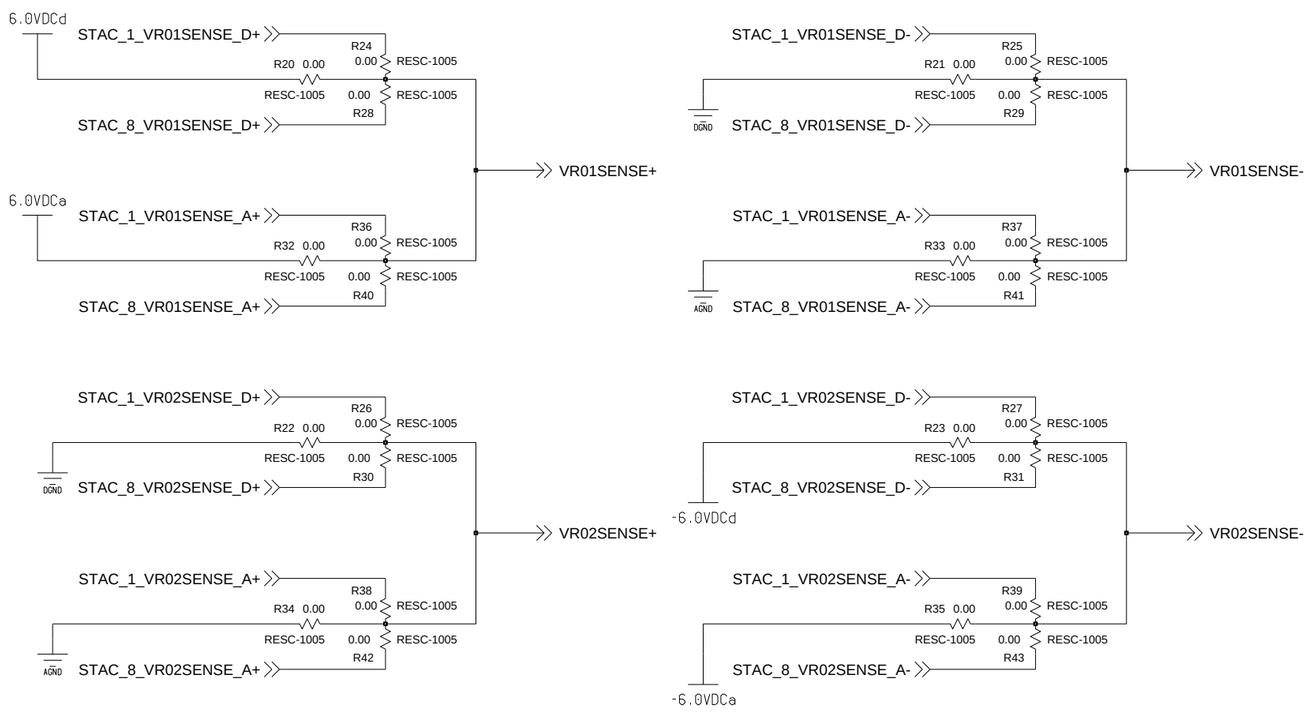

End Cap Board		
VRSENSE select and VETOBus to STAC		
Rev	**Designed By**	**Saved Date**
A	Andrew Reiman	Wednesday, September 5, 2007
University of Michigan	**Physics**	Sheet 3 of 4

PMT POWER SUPPLY

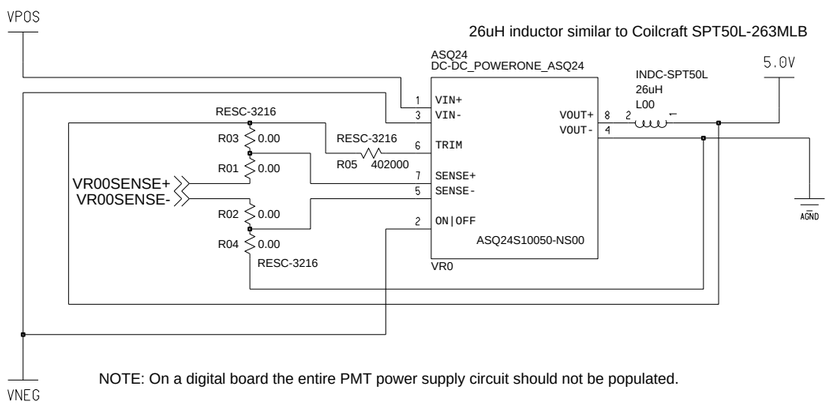

NOTE: On a digital board the entire PMT power supply circuit should not be populated.

REMOTE SENSE ENABLED	REMOTE SENSE DISABLED
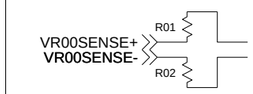	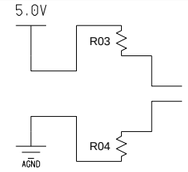
If R01 and R02 are installed remote sensing is enabled if R03 and R04 are installed remote sensing is disabled	

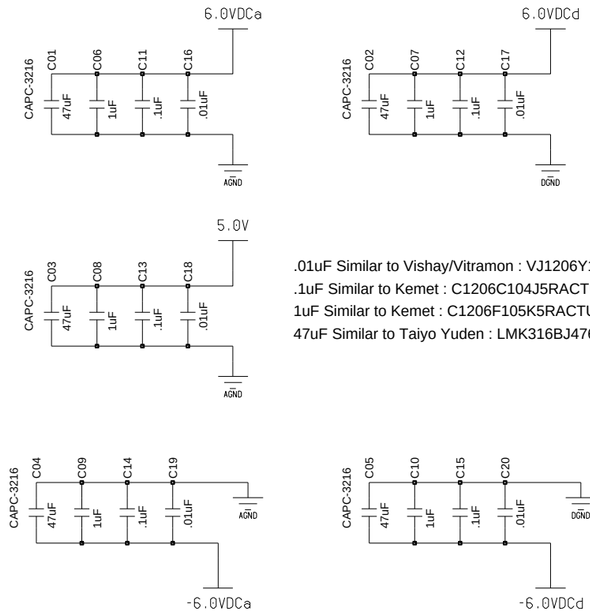

.01uF Similar to Vishay/Vitramon : VJ1206Y103KBBAT4X
.1uF Similar to Kemet : C1206C104J5RACTU
1uF Similar to Kemet : C1206F105K5RACTU
47uF Similar to Taiyo Yuden : LMK316BJ476ML-T

BOARD POWER SUPPLIES

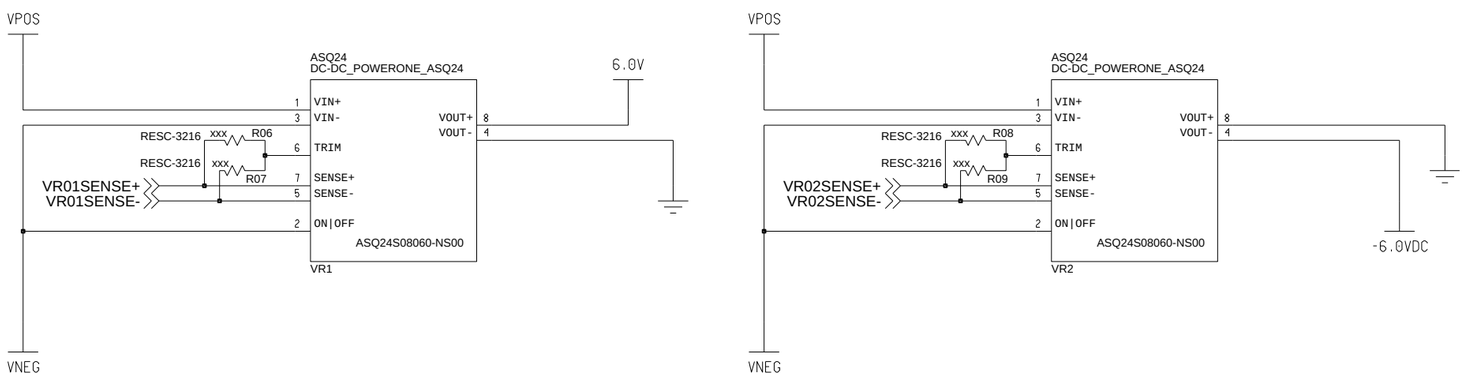

VOLTAGE TRIMMING NOTES

To trim the PMT power supply from 5.0V to 5.2V R05 should be installed.
To trim to a voltage other than 5.2V R05 may be replaced by a similar resistor of a different value according to the ASQ24 datasheet.

This design allows board power supplies to be trimmed up or down using R14-R21.
To trim up the even resistor should be populated and to trim down the odd resistor should be populated.
See ASQ24 datasheet for specific trimming resistor values.

NOTE: Trimming a negative voltage rail up by .1V will change it from -6.0V to -5.9V

ANALOG / DIGITAL POWER SUPPLY SELECT

On on a digital board L01-L03 should be populated. On an analog board L04-L06 should be populated.

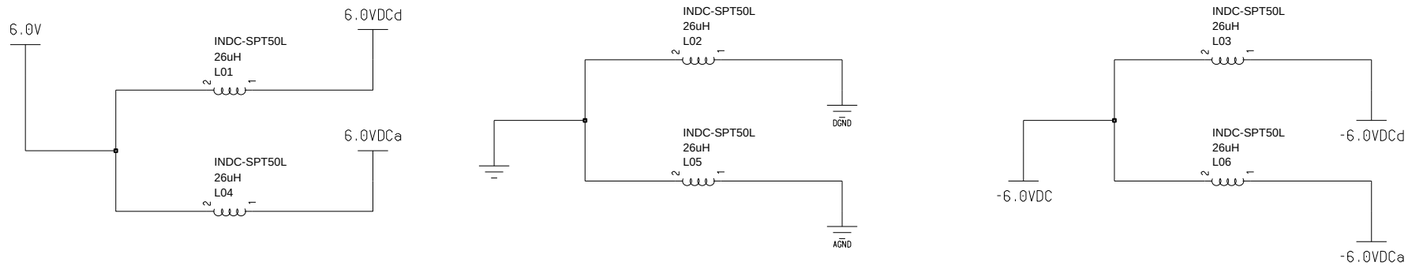

NOTE: Ground is selected using an inductor of large known current capacity; filtering is not necessary.

End Cap Board		
Voltage regulation and decoupling		
Rev	**Designed By**	**Saved Date**
A	Andrew Reiman	Wednesday, September 5, 2007
University of Michigan	**Physics**	Sheet 4 of 4