REVISION RECORD			
LTR	ECO NO:	APPROVED:	DATE:

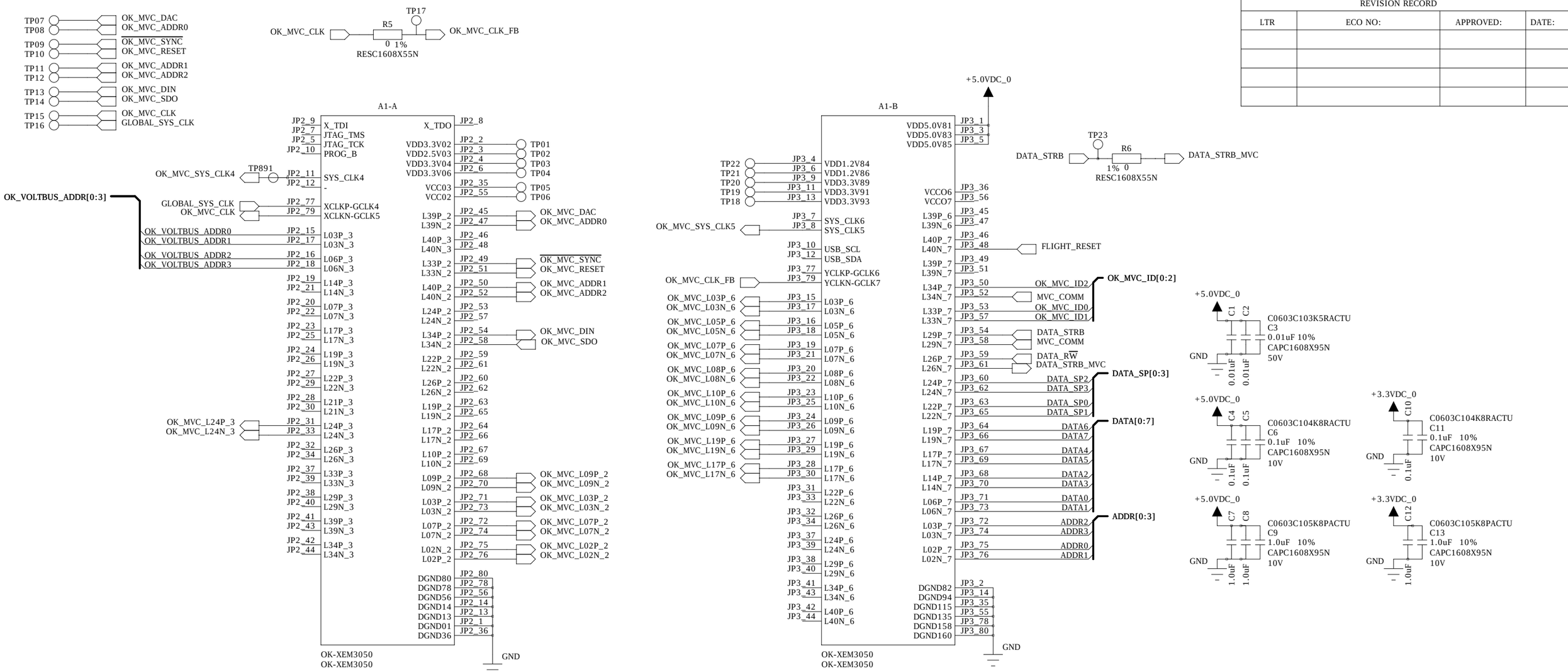

NOTE:
The Master Voltage Controller generates a 10MHz clock, OK_MVC_CLK.
The original clock source is the PLL chip onboard the XEM3050

MASTER VOLTAGE CONTROL

TITLE: CREST - XEM CARRIER	REV: B3	DRAWN: J.Ameel	CHECKED: <Checked By>	QUALITY CONTROL: <QC By>	RELEASED: <Released By>	DRAWING NO: 001	SCALE: 1:1	SIZE: B
FILENAME: XEM-CARRIER-B3.sch	SAVED: 1/27/2010	DATED: 20091103	DATED: <Checked Date>	DATED: <QC Date>	DATED: <Release Date>	COMPANY: Univ. of Michigan - Physics	SHEET: 1 OF 48	

NOTE:
Buffers to protect and minimize loading on the XEM3050 I/O pins
The NC7WP125K8X can handle sufficient current for 12 VOLTbus chains

NOTE:
Inverters for enabling both transmit and receive of LVDS data
coming from/to the 12 VOLTbus channels (8 crystal + 4 Veto chain)

REVISION RECORD			
LTR	ECO NO:	APPROVED:	DATE:

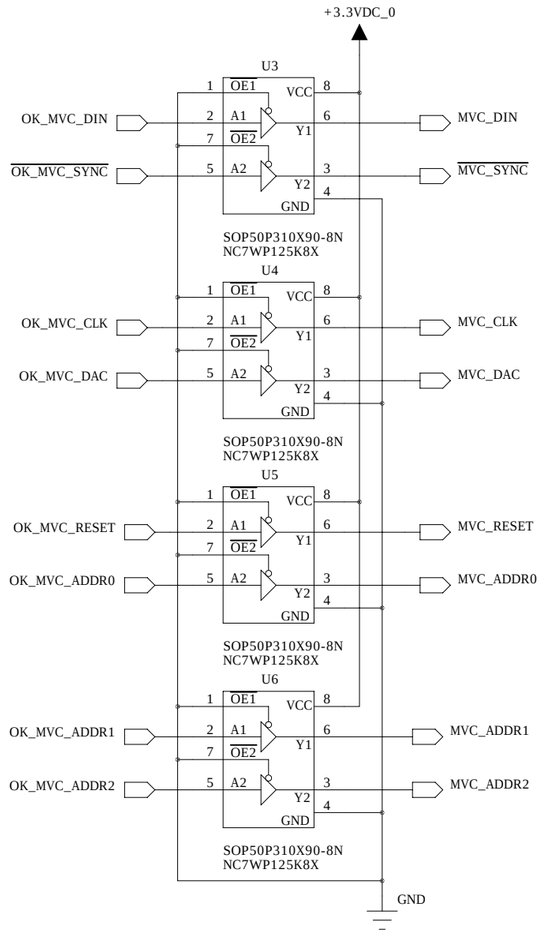

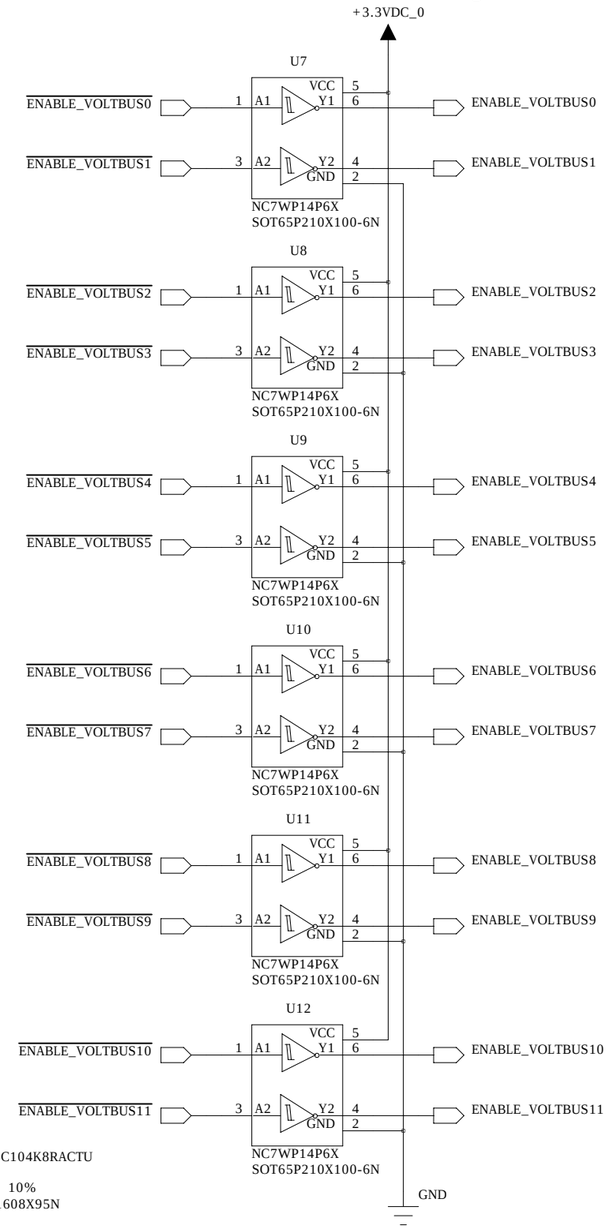

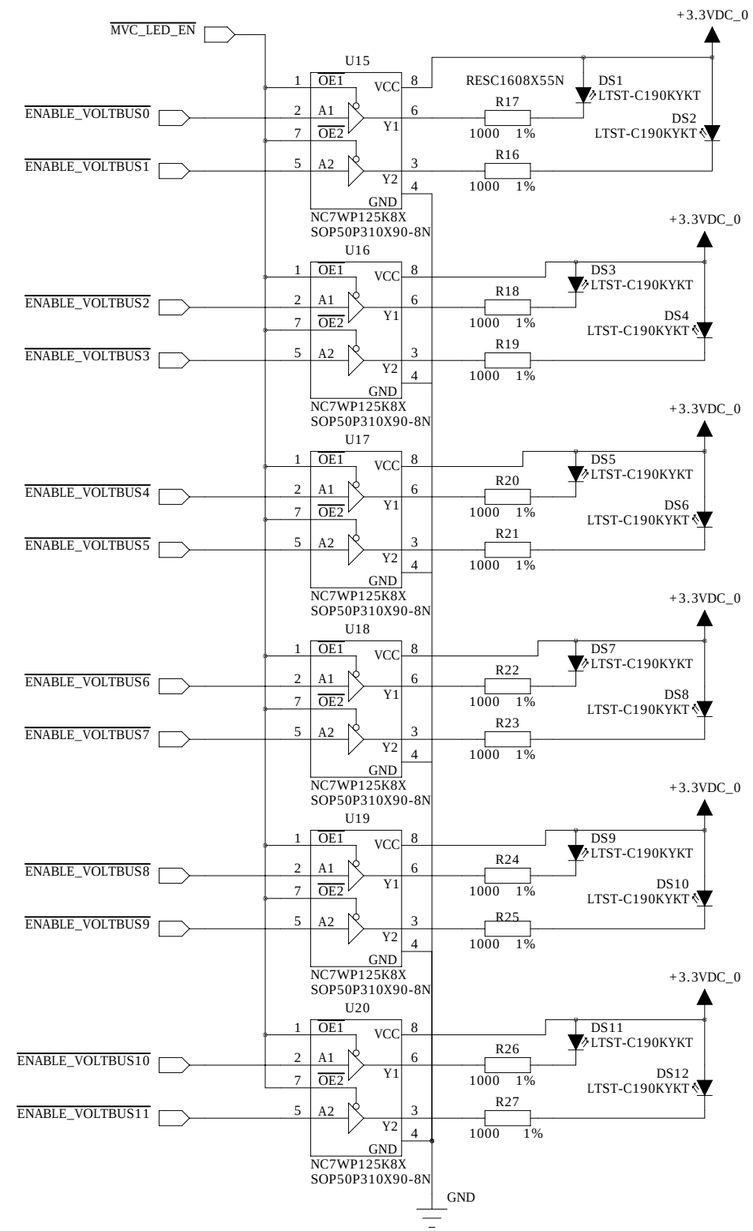

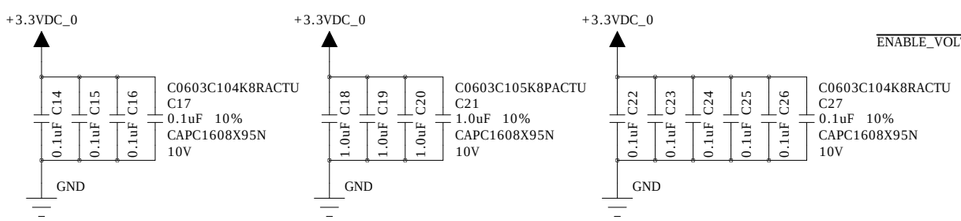

MASTER VOLTAGE CONTROL

TITLE: CREST - XEM CARRIER	REV: B3	DRAWN: J.Ameel	CHECKED: <Checked By>	QUALITY CONTROL: <QC By>	RELEASED: <Released By>	DRAWING NO: 001	SCALE: 1:1	SIZE: B
FILENAME: XEM-CARRIER-B3.sch	SAVED: 1/27/2010	DATED: 20091103	DATED: <Checked Date>	DATED: <QC Date>	DATED: <Release Date>	COMPANY: Univ. of Michigan - Physics	SHEET: 2 OF 48

REVISION RECORD			
LTR	ECO NO:	APPROVED:	DATE:

VOLTbus Spy Diagnostic

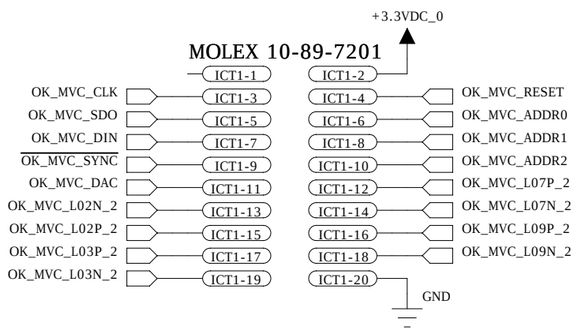

VOLTbus Enable Diagnostic

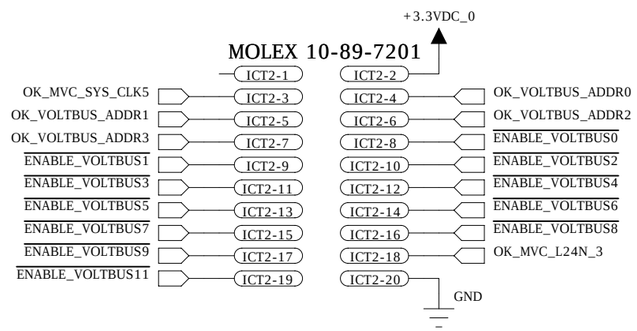

Boardwide Data/Address

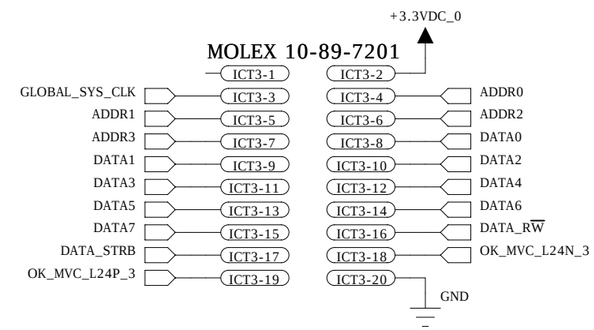

MVC SPARES

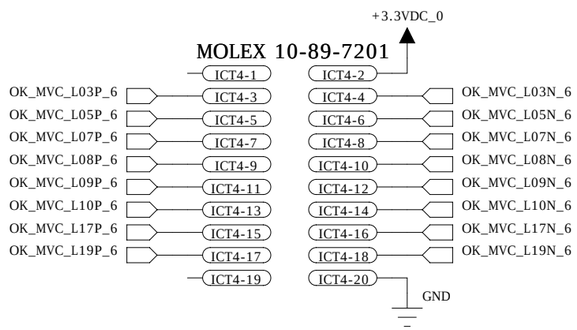

MASTER VOLTAGE CONTROL

TITLE: CREST - XEM CARRIER	REV: B3	DRAWN: J.Ameel	CHECKED: <Checked By>	QUALITY CONTROL: <QC By>	RELEASED: <Released By>	DRAWING NO: 001	SCALE: 1:1	SIZE: B
FILENAME: XEM-CARRIER-B3.sch	SAVED: 1/27/2010	DATED: 20091103	DATED: <Checked Date>	DATED: <QC Date>	DATED: <Release Date>	COMPANY: Univ. of Michigan - Physics	SHEET: 3 OF 48

REVISION RECORD			
LTR	ECO NO:	APPROVED:	DATE:

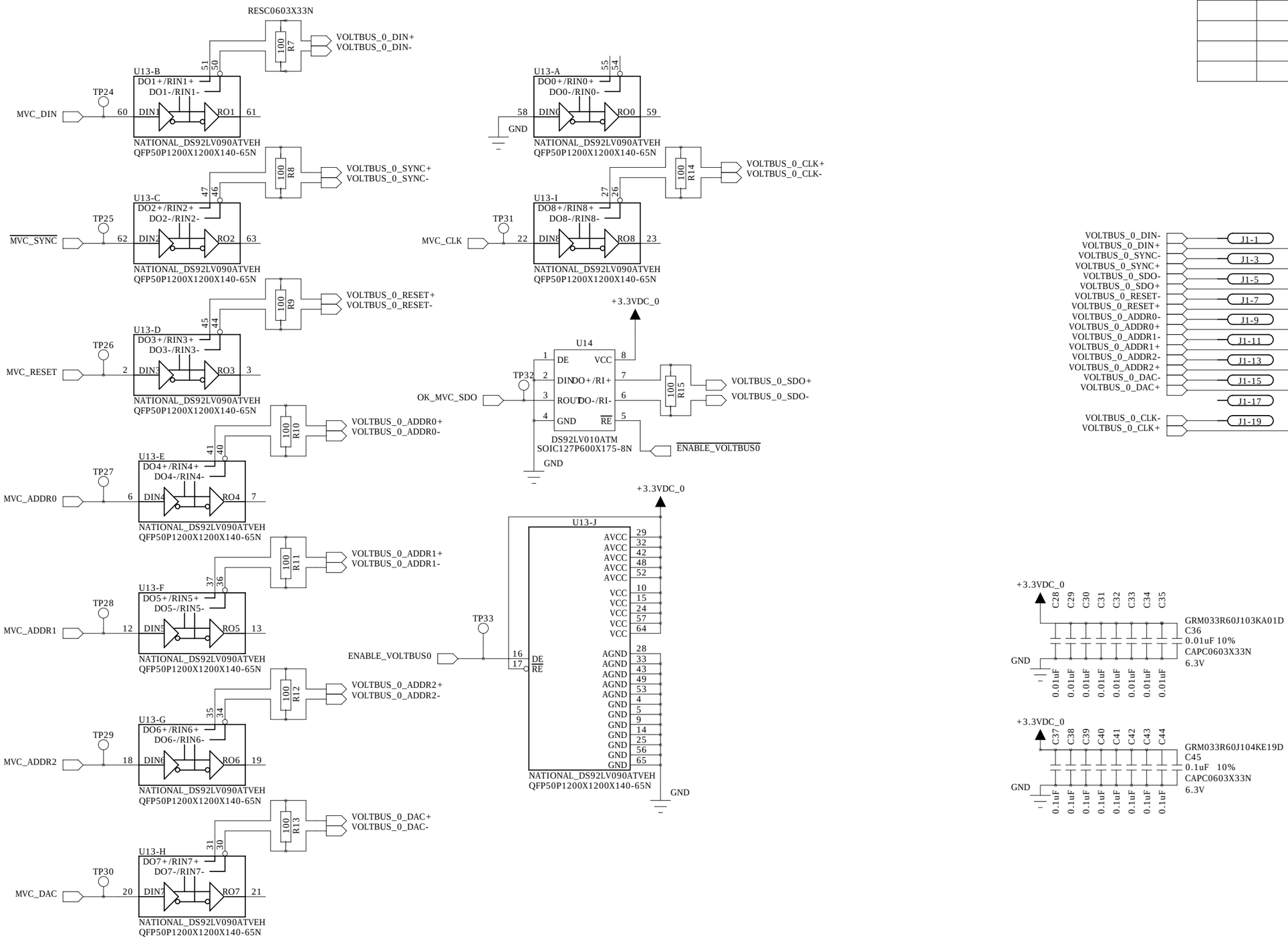

VOLTbus 0

MASTER VOLTAGE CONTROL

TITLE: CREST - XEM CARRIER	REV: B3	DRAWN: J.Ameel	CHECKED: <Checked By>	QUALITY CONTROL: <QC By>	RELEASED: <Released By>	DRAWING NO: 001	SCALE: 1:1	SIZE: B
FILENAME: XEM-CARRIER-B3.sch	SAVED: 1/27/2010	DATED: 20091103	DATED: <Checked Date>	DATED: <QC Date>	DATED: <Release Date>	COMPANY: Univ. of Michigan - Physics	SHEET: 4 OF 48

REVISION RECORD			
LTR	ECO NO:	APPROVED:	DATE:

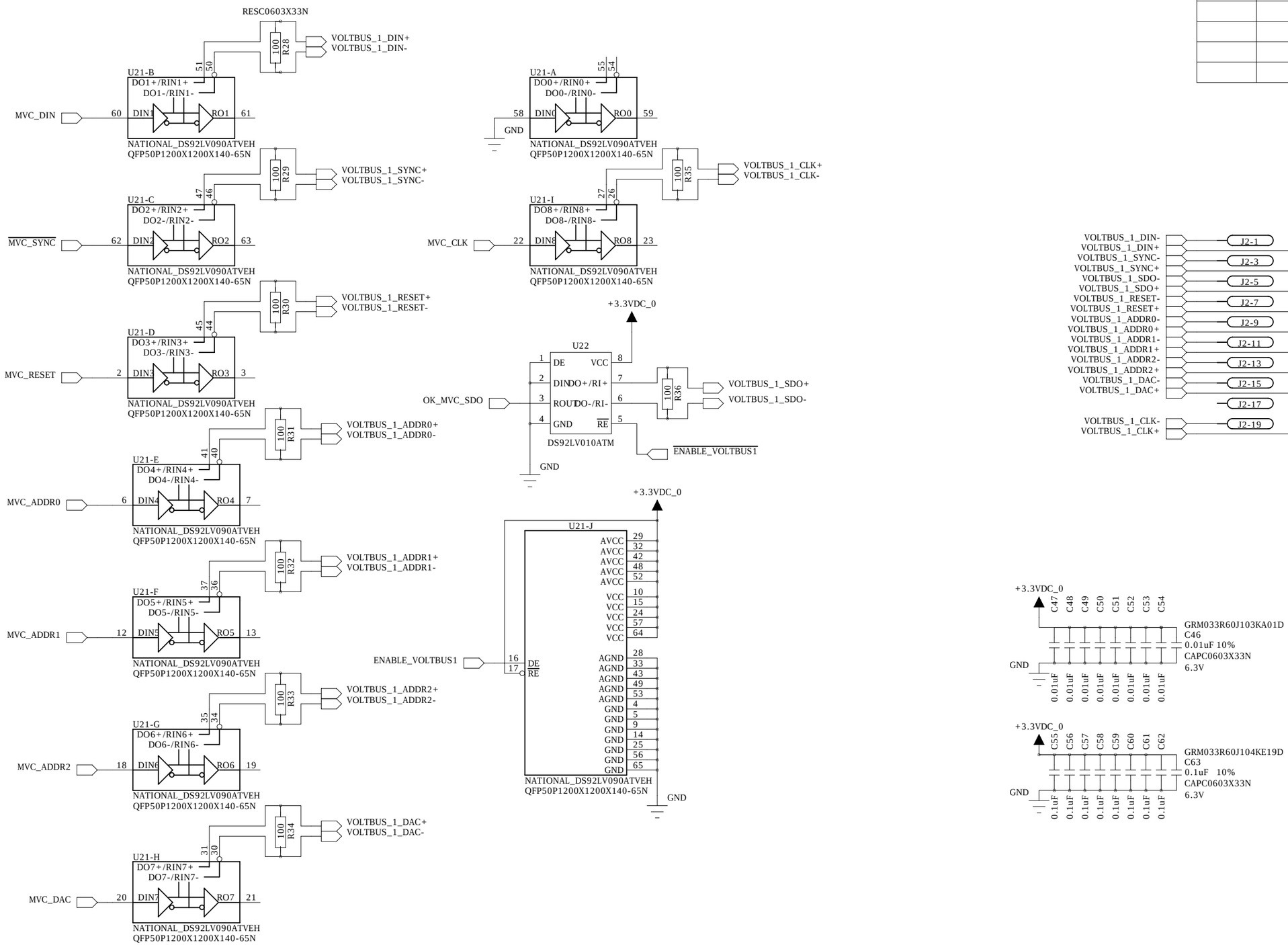

VOLTbus 1
MASTER VOLTAGE CONTROL

TITLE: CREST - XEM CARRIER	REV: B3	DRAWN: J.Ameel	CHECKED: <Checked By>	QUALITY CONTROL: <QC By>	RELEASED: <Released By>	DRAWING NO: 001	SCALE: 1:1	SIZE: B
FILENAME: XEM-CARRIER-B3.sch	SAVED: 1/27/2010	DATED: 20091103	DATED: <Checked Date>	DATED: <QC Date>	DATED: <Release Date>	COMPANY: Univ. of Michigan - Physics	SHEET: 5 OF 48	

REVISION RECORD			
LTR	ECO NO:	APPROVED:	DATE:

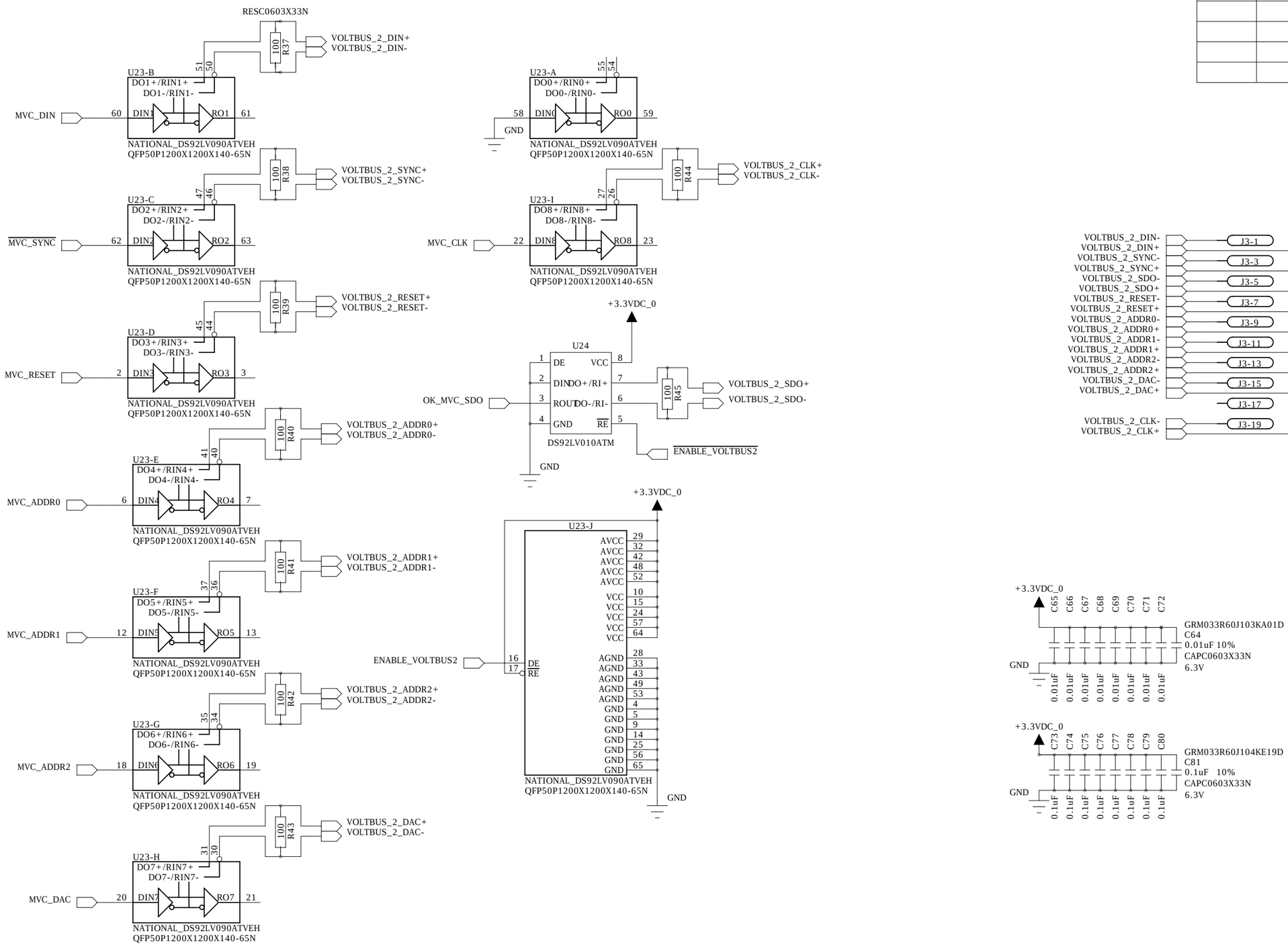

VOLTbus 2
MASTER VOLTAGE CONTROL

TITLE: CREST - XEM CARRIER	REV: B3	DRAWN: J.Ameel	CHECKED: <Checked By>	QUALITY CONTROL: <QC By>	RELEASED: <Released By>	DRAWING NO: 001	SCALE: 1:1	SIZE: B
FILENAME: XEM-CARRIER-B3.sch	SAVED: 1/27/2010	DATED: 20091103	DATED: <Checked Date>	DATED: <QC Date>	DATED: <Release Date>	COMPANY: Univ. of Michigan - Physics	SHEET: 6 OF 48	

REVISION RECORD			
LTR	ECO NO:	APPROVED:	DATE:

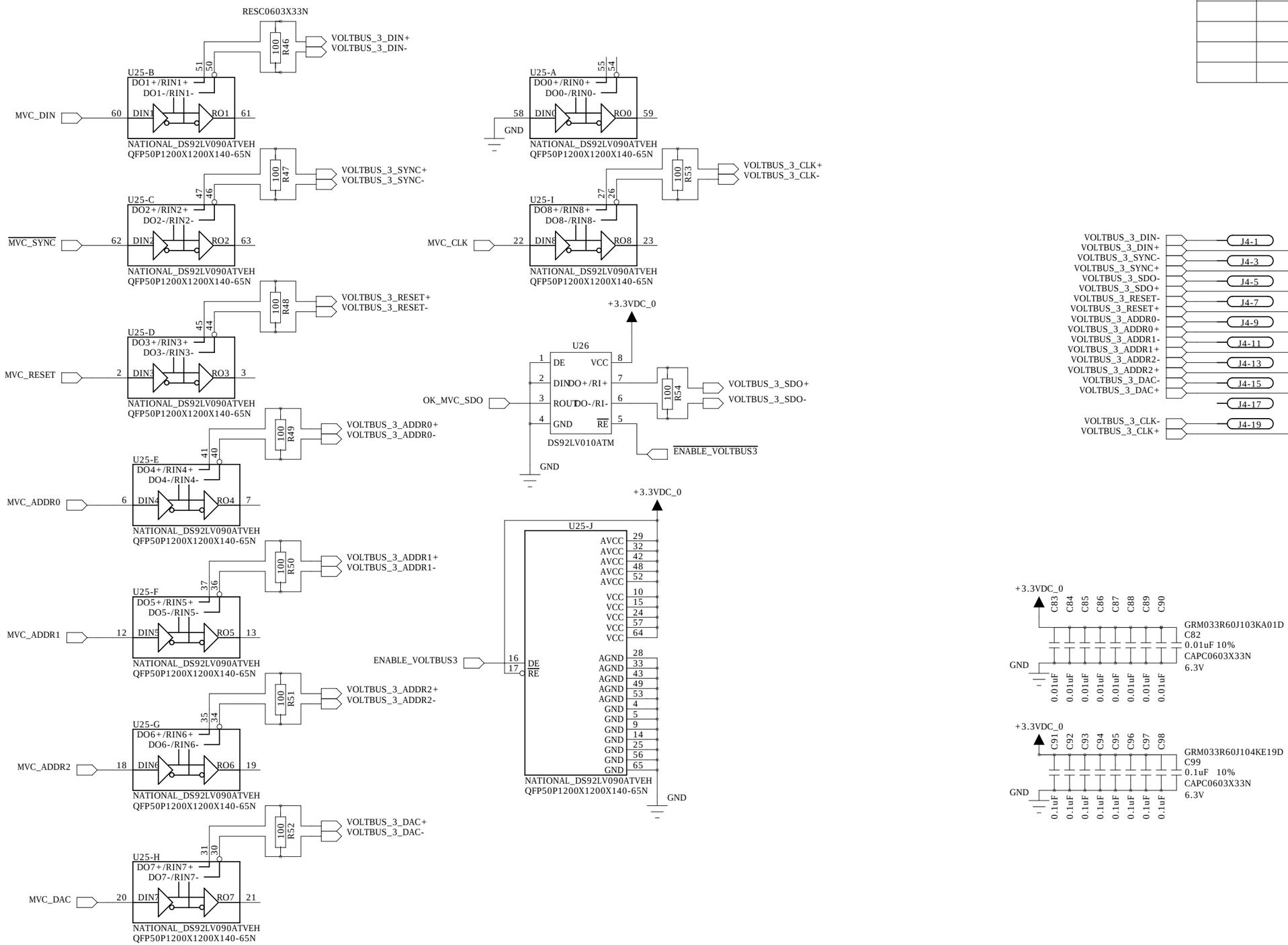

VOLTbus 3
MASTER VOLTAGE CONTROL

TITLE: CREST - XEM CARRIER	REV: B3	DRAWN: J.Ameel	CHECKED: <Checked By>	QUALITY CONTROL: <QC By>	RELEASED: <Released By>	DRAWING NO: 001	SCALE: 1:1	SIZE: B
FILENAME: XEM-CARRIER-B3.sch	SAVED: 1/27/2010	DATED: 20091103	DATED: <Checked Date>	DATED: <QC Date>	DATED: <Release Date>	COMPANY: Univ. of Michigan - Physics	SHEET: 7 OF 48	

REVISION RECORD			
LTR	ECO NO:	APPROVED:	DATE:

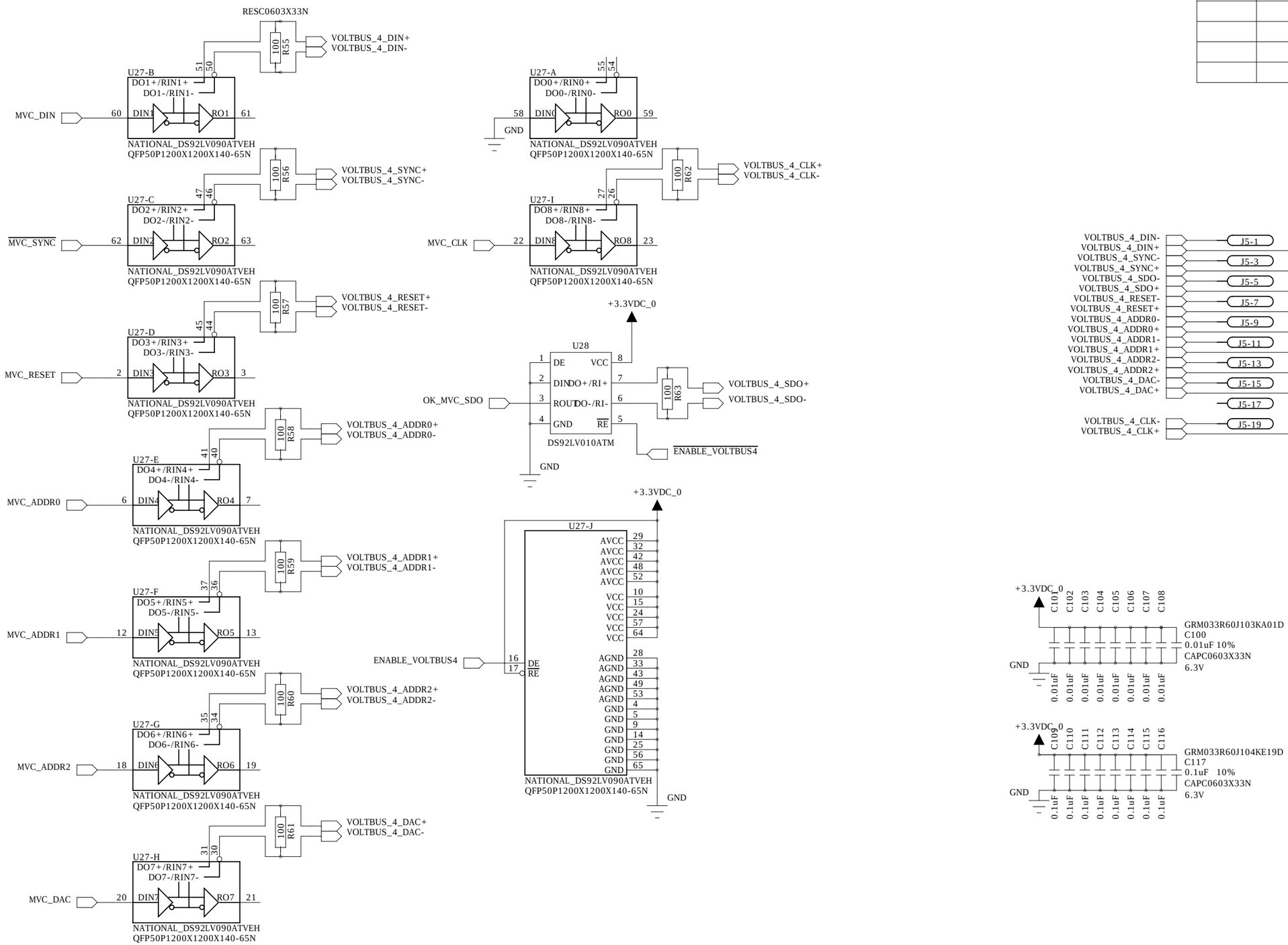

VOLTbus 4

MASTER VOLTAGE CONTROL

TITLE: CREST - XEM CARRIER	REV: B3	DRAWN: J.Ameel	CHECKED: <Checked By>	QUALITY CONTROL: <QC By>	RELEASED: <Released By>	DRAWING NO: 001	SCALE: 1:1	SIZE: B
FILENAME: XEM-CARRIER-B3.sch	SAVED: 1/27/2010	DATED: 20091103	DATED: <Checked Date>	DATED: <QC Date>	DATED: <Release Date>	COMPANY: Univ. of Michigan - Physics	SHEET: 8 OF 48	

REVISION RECORD			
LTR	ECO NO:	APPROVED:	DATE:

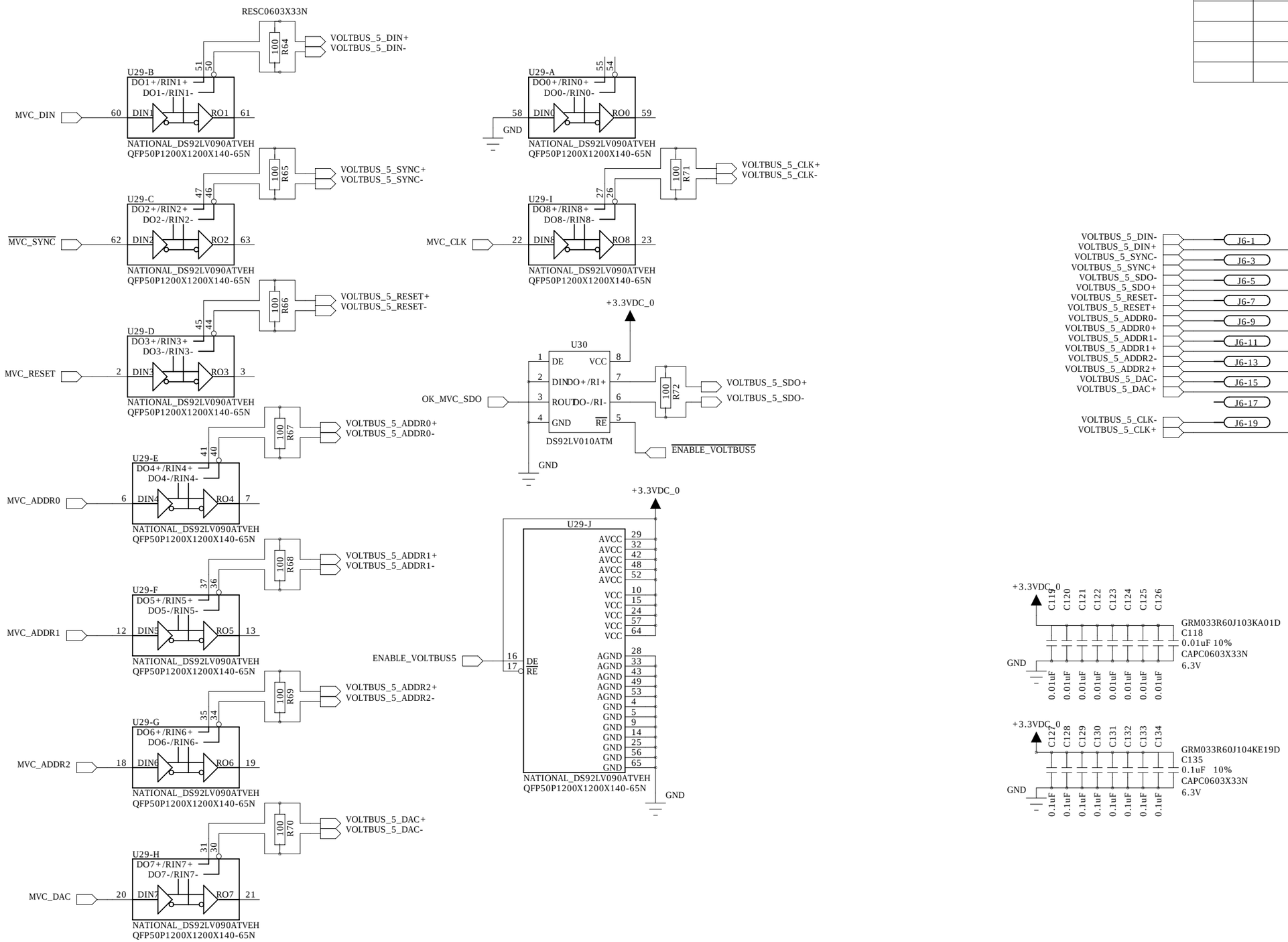

VOLTbus 5

MASTER VOLTAGE CONTROL

TITLE: CREST - XEM CARRIER	REV: B3	DRAWN: J.Ameel	CHECKED: <Checked By>	QUALITY CONTROL: <QC By>	RELEASED: <Released By>	DRAWING NO: 001	SCALE: 1:1	SIZE: B
FILENAME: XEM-CARRIER-B3.sch	SAVED: 1/27/2010	DATED: 20091103	DATED: <Checked Date>	DATED: <QC Date>	DATED: <Release Date>	COMPANY: Univ. of Michigan - Physics	SHEET: 9 OF 48	

REVISION RECORD			
LTR	ECO NO:	APPROVED:	DATE:

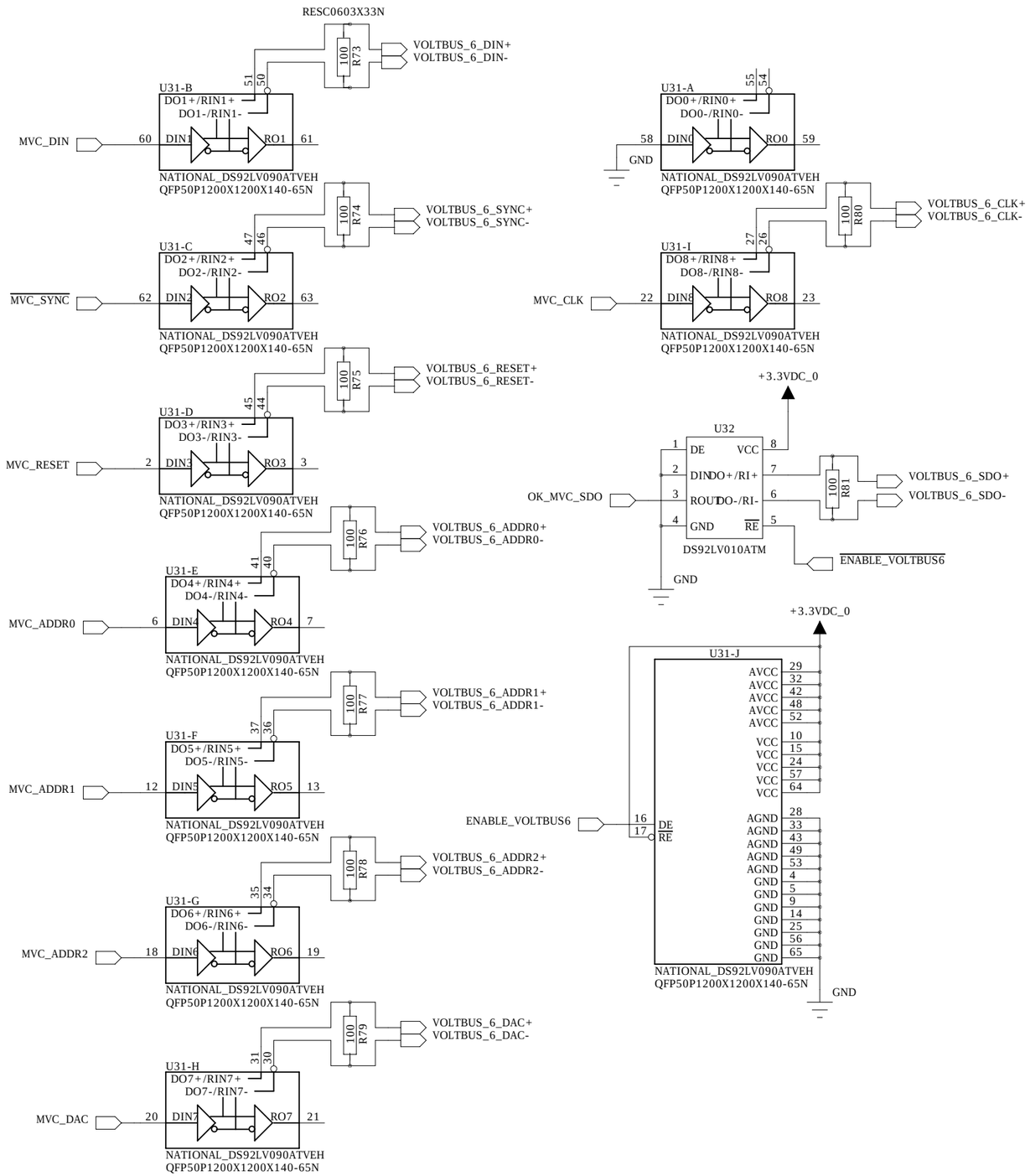

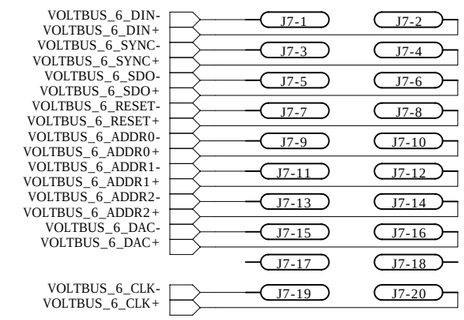

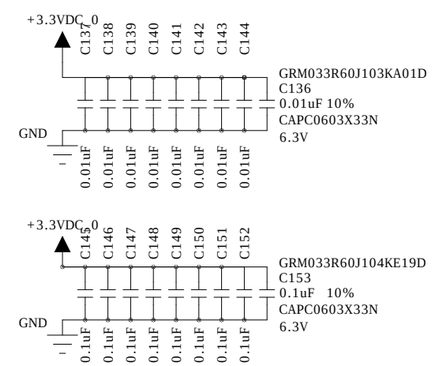

VOLTbus 6

MASTER VOLTAGE CONTROL

TITLE: CREST - XEM CARRIER	REV: B3	DRAWN: J.Ameel	CHECKED: <Checked By>	QUALITY CONTROL: <QC By>	RELEASED: <Released By>	DRAWING NO: 001	SCALE: 1:1	SIZE: B
FILENAME: XEM-CARRIER-B3.sch	SAVED: 1/27/2010	DATED: 20091103	DATED: <Checked Date>	DATED: <QC Date>	DATED: <Release Date>	COMPANY: Univ. of Michigan - Physics	SHEET: 10 OF 48	

REVISION RECORD			
LTR	ECO NO:	APPROVED:	DATE:

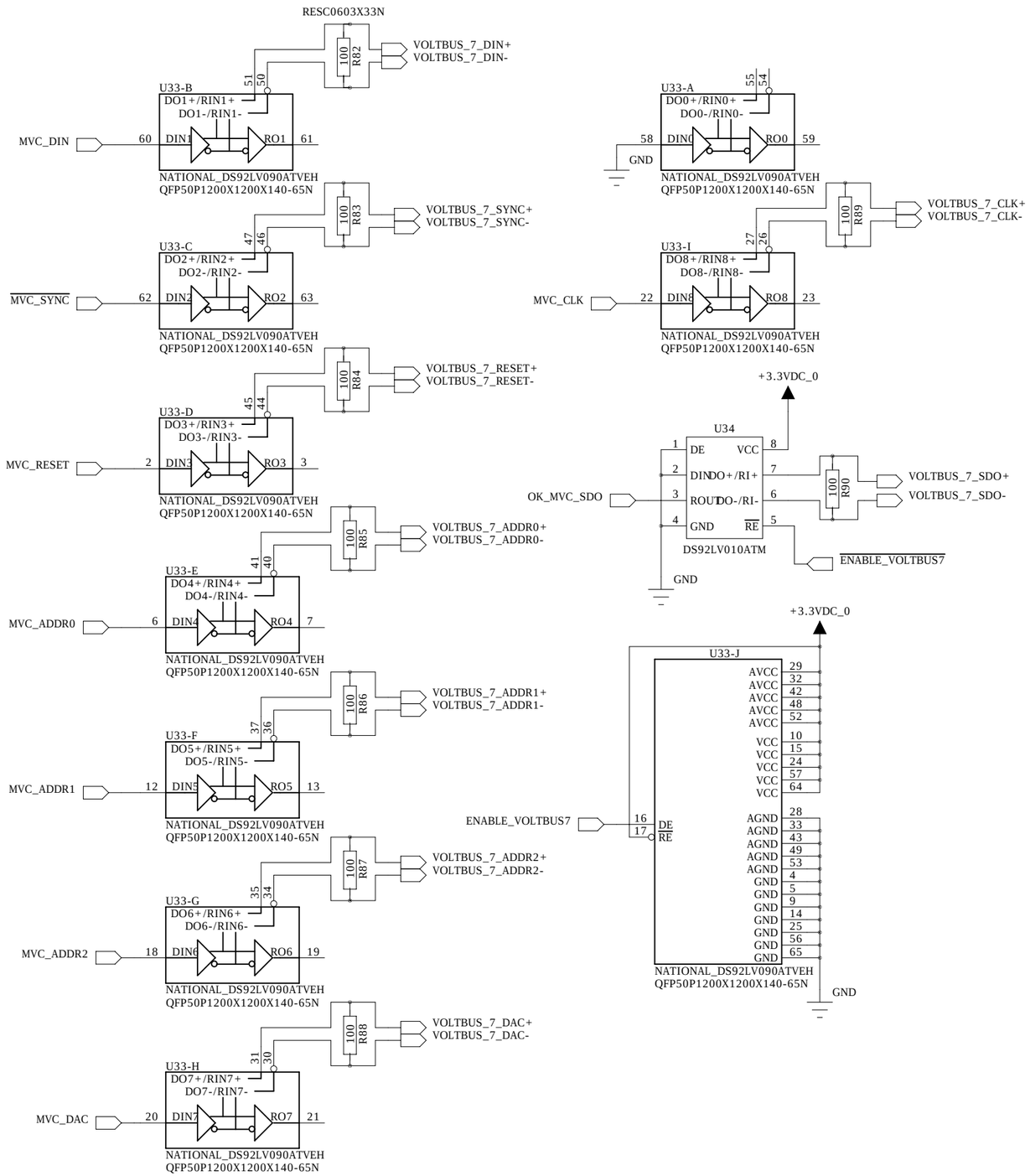

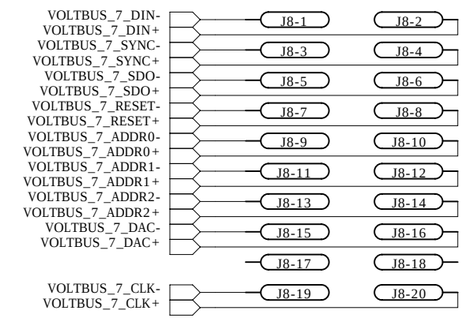

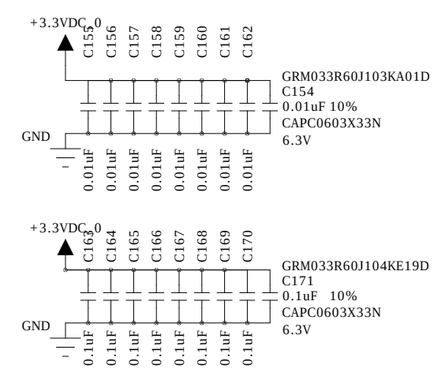

VOLTbus 7

MASTER VOLTAGE CONTROL

TITLE: CREST - XEM CARRIER	REV: B3	DRAWN: J.Ameel	CHECKED: <Checked By>	QUALITY CONTROL: <QC By>	RELEASED: <Released By>	DRAWING NO: 001	SCALE: 1:1	SIZE: B
FILENAME: XEM-CARRIER-B3.sch	SAVED: 1/27/2010	DATED: 20091103	DATED: <Checked Date>	DATED: <QC Date>	DATED: <Release Date>	COMPANY: Univ. of Michigan - Physics	SHEET: 11 OF 48

REVISION RECORD			
LTR	ECO NO:	APPROVED:	DATE:

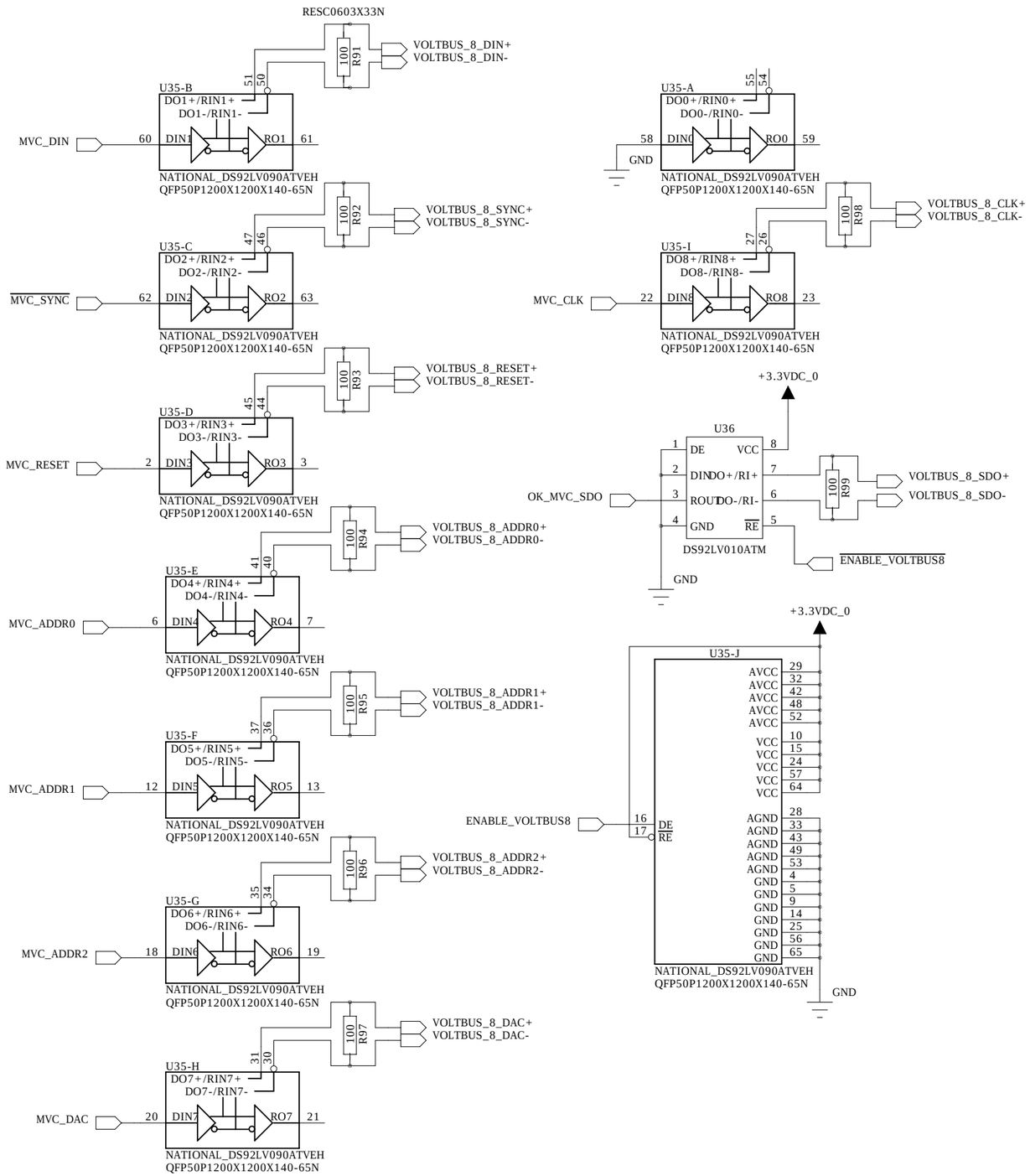

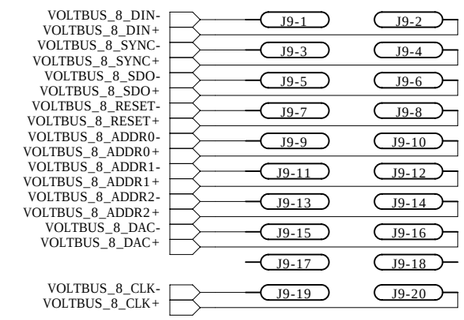

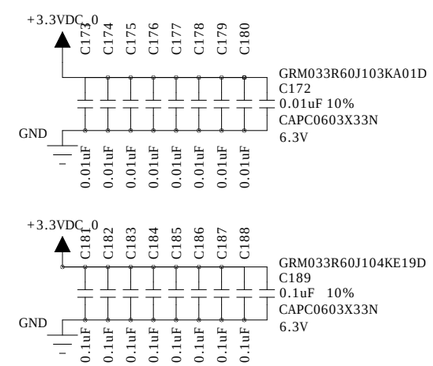

VOLTbus 8

MASTER VOLTAGE CONTROL

TITLE: CREST - XEM CARRIER	REV: B3	DRAWN: J.Ameel	CHECKED: <Checked By>	QUALITY CONTROL: <QC By>	RELEASED: <Released By>	DRAWING NO: 001	SCALE: 1:1	SIZE: B
FILENAME: XEM-CARRIER-B3.sch	SAVED: 1/27/2010	DATED: 20091103	DATED: <Checked Date>	DATED: <QC Date>	DATED: <Release Date>	COMPANY: Univ. of Michigan - Physics	SHEET: 12 OF 48	

REVISION RECORD			
LTR	ECO NO:	APPROVED:	DATE:

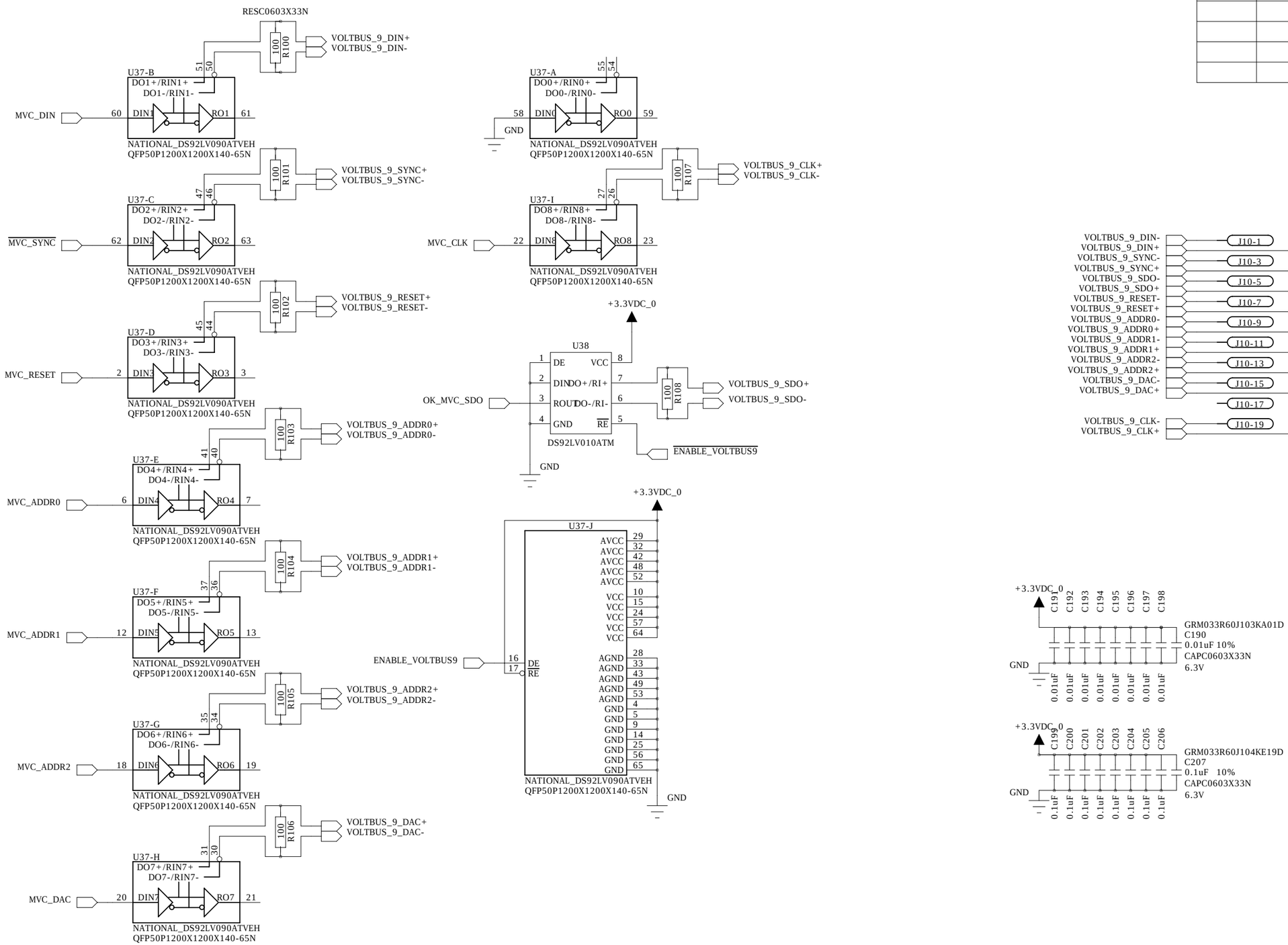

VOLTbus 9

MASTER VOLTAGE CONTROL

TITLE: CREST - XEM CARRIER	REV: B3	DRAWN: J.Ameel	CHECKED: <Checked By>	QUALITY CONTROL: <QC By>	RELEASED: <Released By>	DRAWING NO: 001	SCALE: 1:1	SIZE: B
FILENAME: XEM-CARRIER-B3.sch	SAVED: 1/27/2010	DATED: 20091103	DATED: <Checked Date>	DATED: <QC Date>	DATED: <Release Date>	COMPANY: Univ. of Michigan - Physics	SHEET: 13 OF 48	

REVISION RECORD			
LTR	ECO NO:	APPROVED:	DATE:

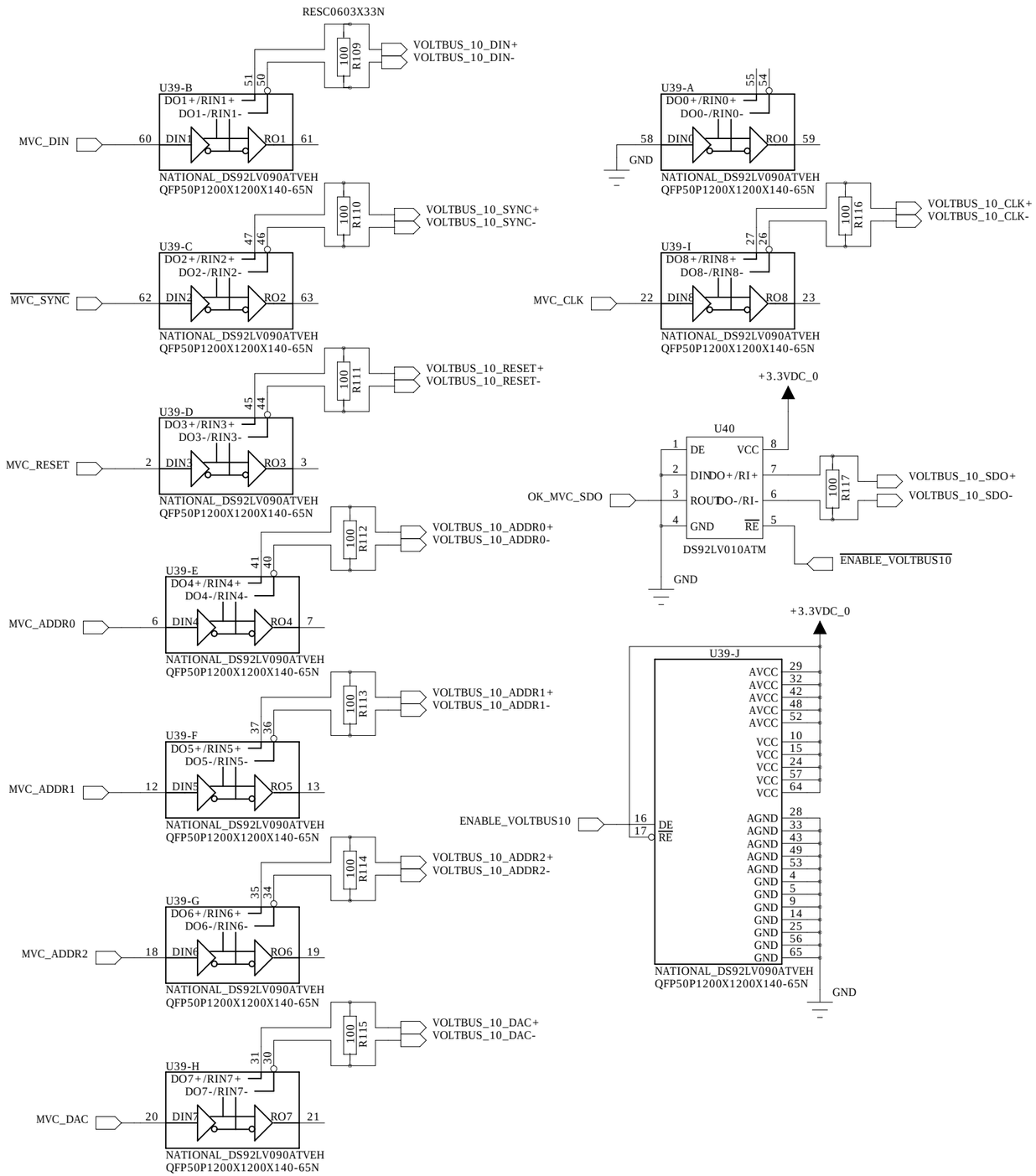

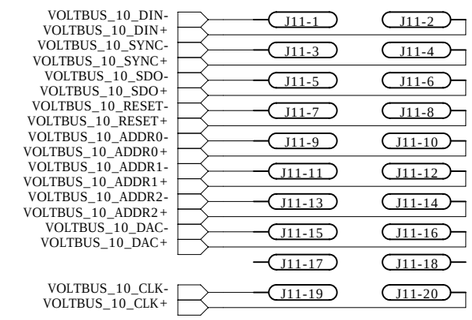

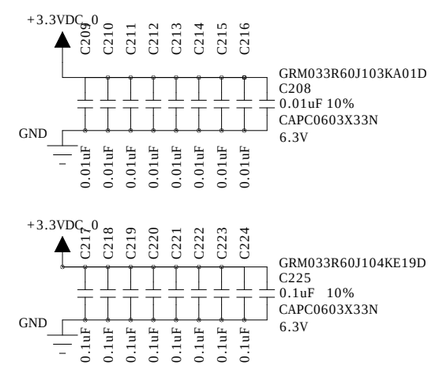

VOLTbus 10

MASTER VOLTAGE CONTROL

TITLE: CREST - XEM CARRIER	REV: B3	DRAWN: J.Ameel	CHECKED: <Checked By>	QUALITY CONTROL: <QC By>	RELEASED: <Released By>	DRAWING NO: 001	SCALE: 1:1	SIZE: B
FILENAME: XEM-CARRIER-B3.sch	SAVED: 1/27/2010	DATED: 20091103	DATED: <Checked Date>	DATED: <QC Date>	DATED: <Release Date>	COMPANY: Univ. of Michigan - Physics	SHEET: 14 OF 48

REVISION RECORD			
LTR	ECO NO:	APPROVED:	DATE:

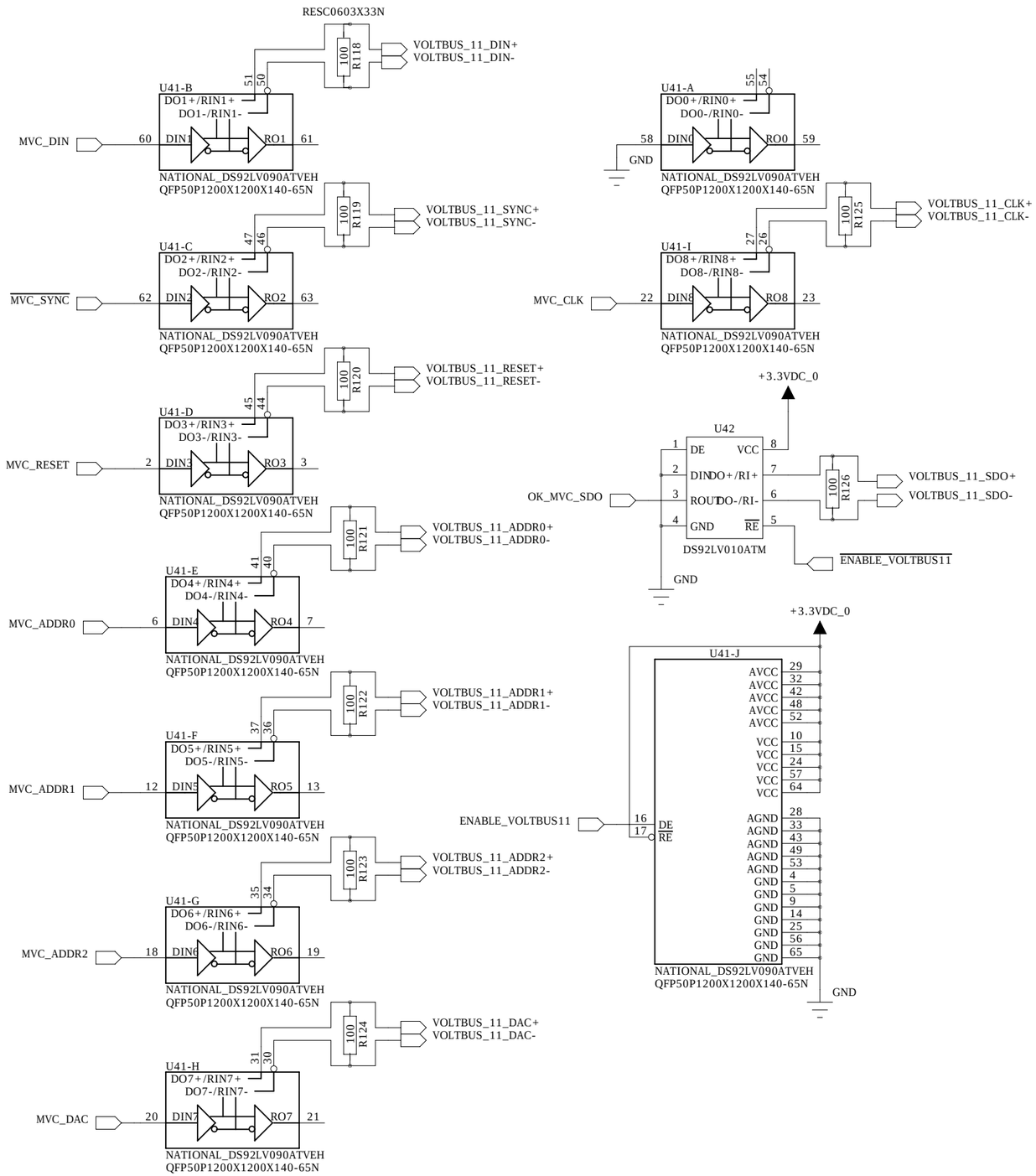

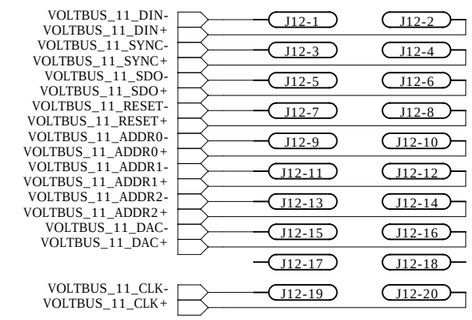

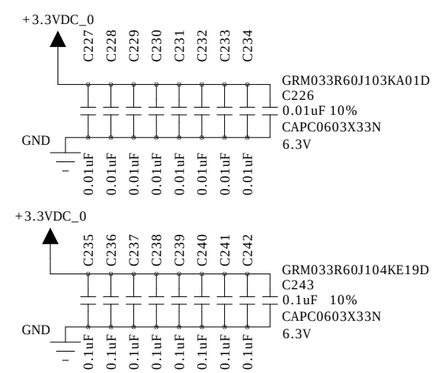

VOLTbus 11

MASTER VOLTAGE CONTROL

TITLE: CREST - XEM CARRIER	REV: B3	DRAWN: J.Ameel	CHECKED: <Checked By>	QUALITY CONTROL: <QC By>	RELEASED: <Released By>	DRAWING NO: 001	SCALE: 1:1	SIZE: B
FILENAME: XEM-CARRIER-B3.sch	SAVED: 1/27/2010	DATED: 20091103	DATED: <Checked Date>	DATED: <QC Date>	DATED: <Release Date>	COMPANY: Univ. of Michigan - Physics	SHEET: 15 OF 48

REVISION RECORD			
LTR	ECO NO:	APPROVED:	DATE:

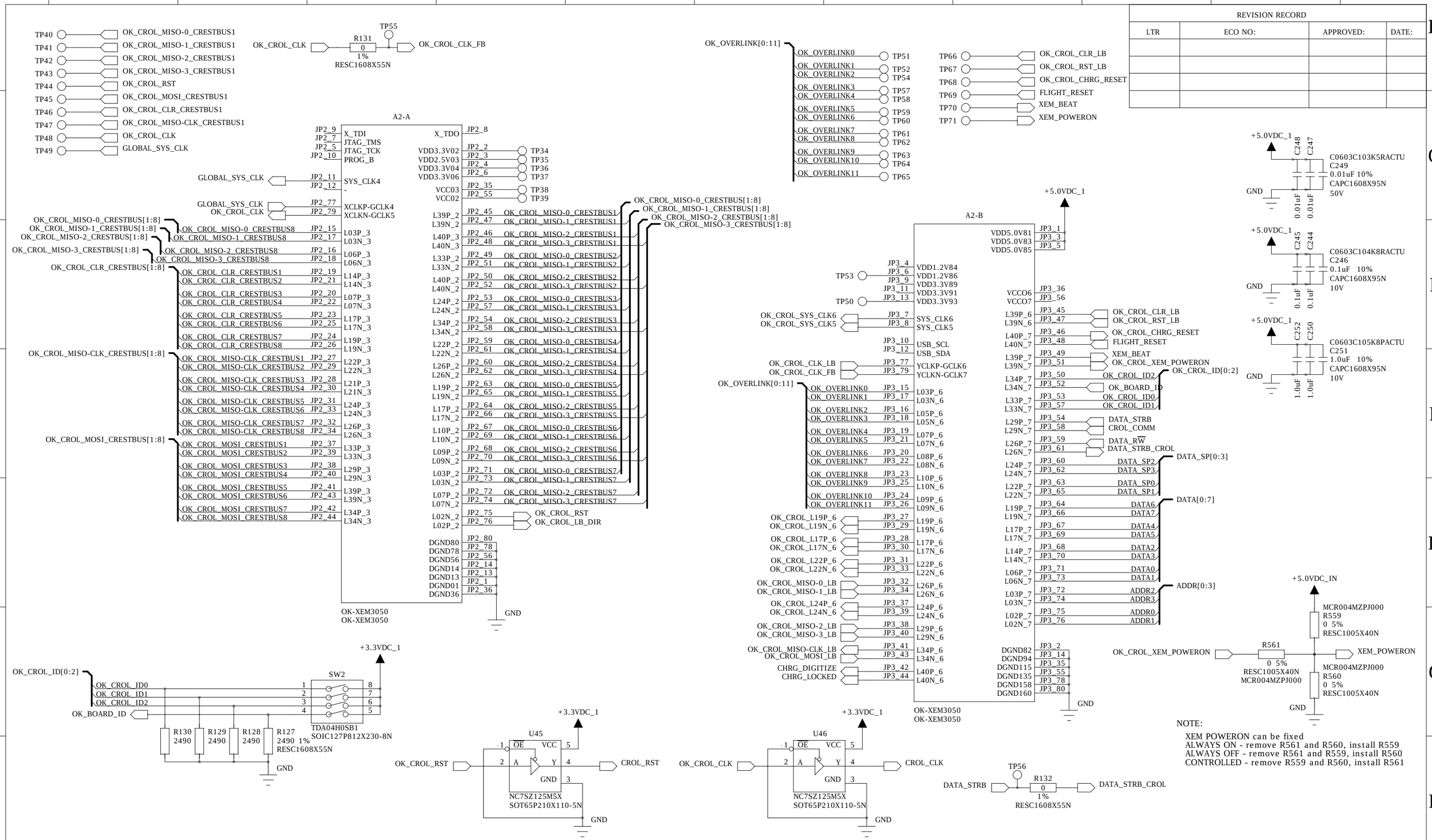

NOTE:

XEM POWERON can be fixed
ALWAYS ON - remove R561 and R560, install R559
ALWAYS OFF - remove R561 and R559, install R560
CONTROLLED - remove R559 and R560, install R561

CRYSTAL OVERLORD

TITLE: CREST - XEM CARRIER	REV: B3	DRAWN: J.Ameel	CHECKED: <Checked By>	QUALITY CONTROL: <QC By>	RELEASED: <Released By>	DRAWING NO: 001	SCALE: 1:1	SIZE: B
FILENAME: XEM-CARRIER-B3.sch	SAVED: 1/27/2010	DATED: 20091103	DATED: <Checked Date>	DATED: <QC Date>	DATED: <Release Date>	COMPANY: Univ. of Michigan - Physics	SHEET: 16 OF 48	

REVISION RECORD			
LTR	ECO NO:	APPROVED:	DATE:

CRESTbus Spy Diagnostic

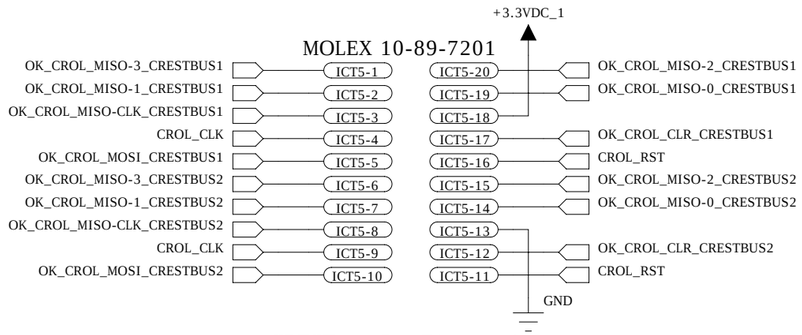

CRESTbus Spy Diagnostic

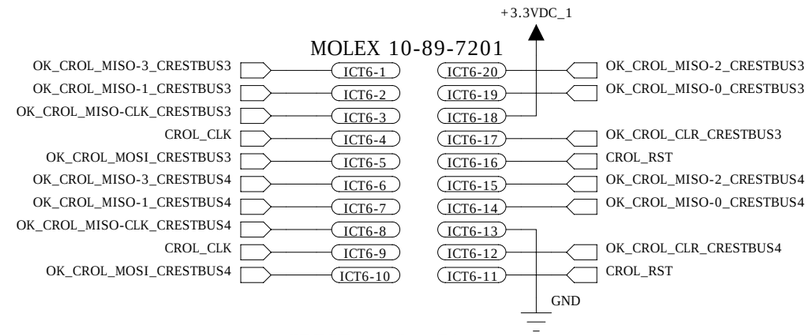

CRESTbus Spy Diagnostic

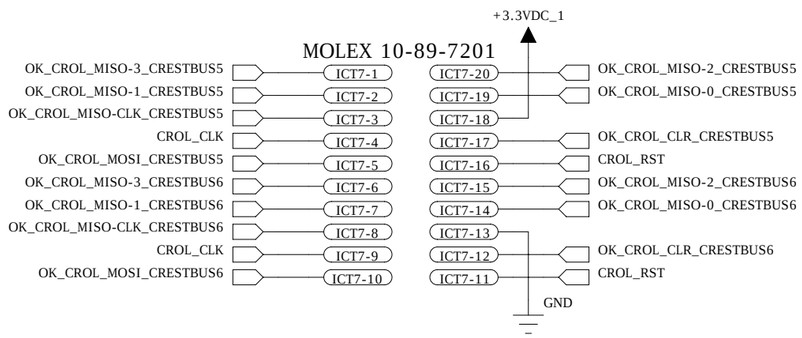

CRESTbus Spy Diagnostic

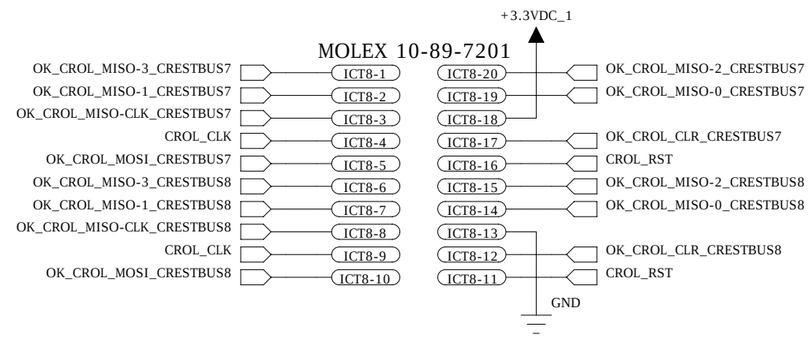

CRESTbus LoopBack Diagnostic

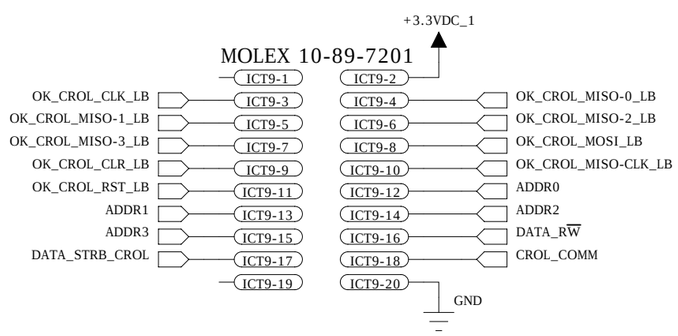

CRESTbus SPARES

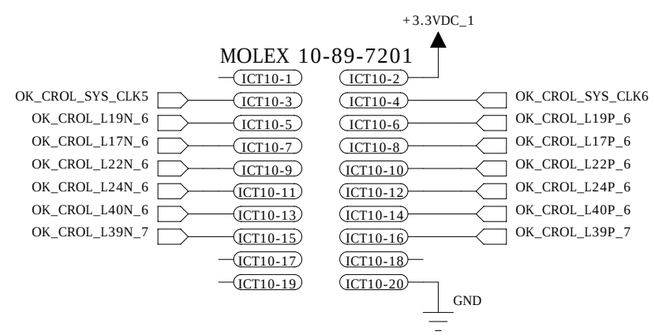

CRYSTAL OVERLORD

TITLE: CREST - XEM CARRIER	REV: B3	DRAWN: J.Ameel	CHECKED: <Checked By>	QUALITY CONTROL: <QC By>	RELEASED: <Released By>	DRAWING NO: 001	SCALE: 1:1	SIZE: B
FILENAME: XEM-CARRIER-B3.sch	SAVED: 1/27/2010	DATED: 20091103	DATED: <Checked Date>	DATED: <QC Date>	DATED: <Release Date>	COMPANY: Univ. of Michigan - Physics	SHEET: 17 OF 48	

REVISION RECORD			
LTR	ECO NO:	APPROVED:	DATE:

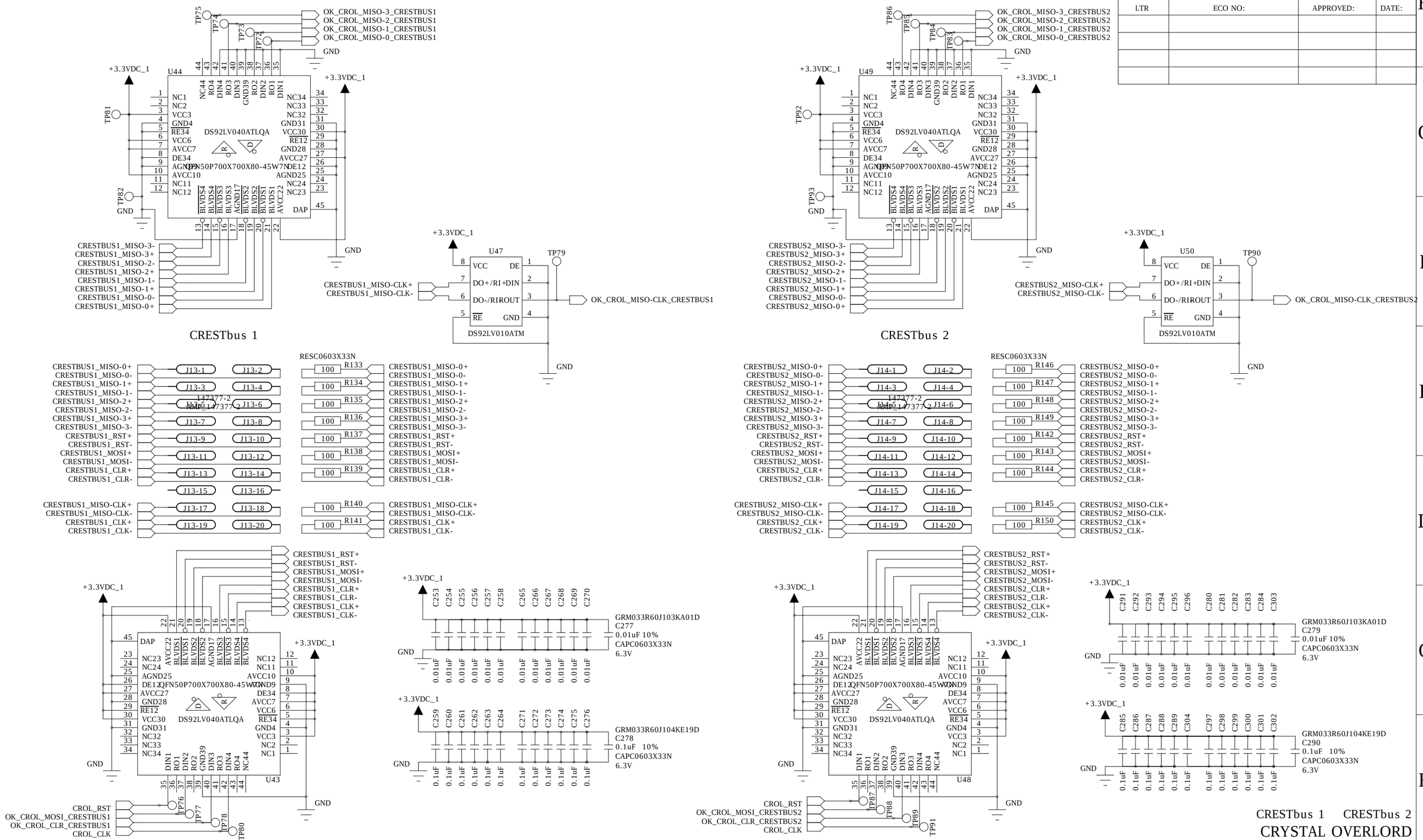

CRESTbus 1 CRESTbus 2

CRYSTAL OVERLORD

TITLE: CREST - XEM CARRIER	REV: B3	DRAWN: J.Ameel	CHECKED: <Checked By>	QUALITY CONTROL: <QC By>	RELEASED: <Released By>	DRAWING NO: 001	SCALE: 1:1	SIZE: B
FILENAME: XEM-CARRIER-B3.sch	SAVED: 1/27/2010	DATED: 20091103	DATED: <Checked Date>	DATED: <QC Date>	DATED: <Release Date>	COMPANY: Univ. of Michigan - Physics	SHEET: 18 OF 48

REVISION RECORD			
LTR	ECO NO:	APPROVED:	DATE:

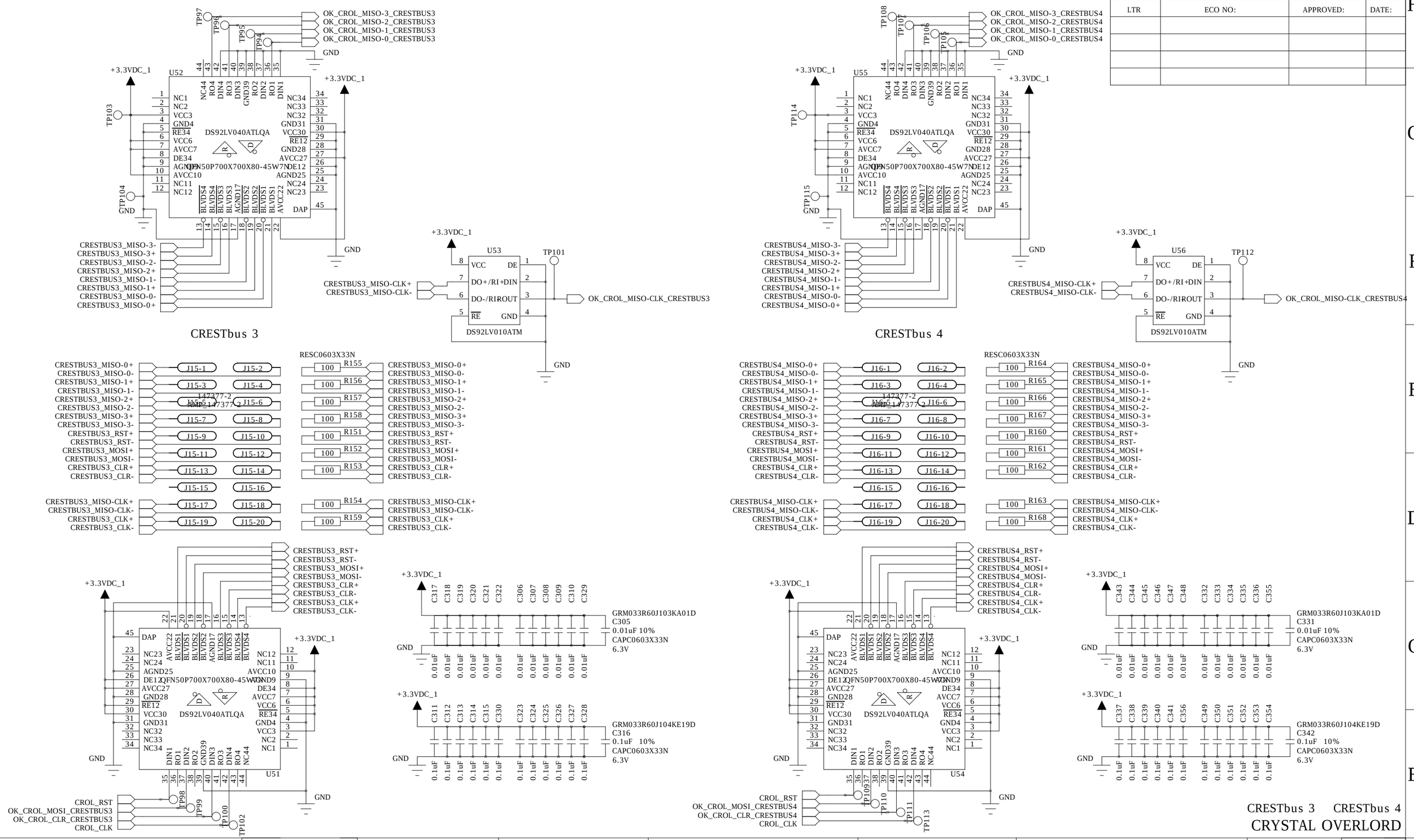

TITLE: CREST - XEM CARRIER	REV: B3	DRAWN: J.Ameel	CHECKED: <Checked By>	QUALITY CONTROL: <QC By>	RELEASED: <Released By>	DRAWING NO: 001	SCALE: 1:1	SIZE: B
FILENAME: XEM-CARRIER-B3.sch	SAVED: 1/27/2010	DATED: 20091103	DATED: <Checked Date>	DATED: <QC Date>	DATED: <Release Date>	COMPANY: Univ. of Michigan - Physics	SHEET: 19 OF 48

REVISION RECORD			
LTR	ECO NO:	APPROVED:	DATE:

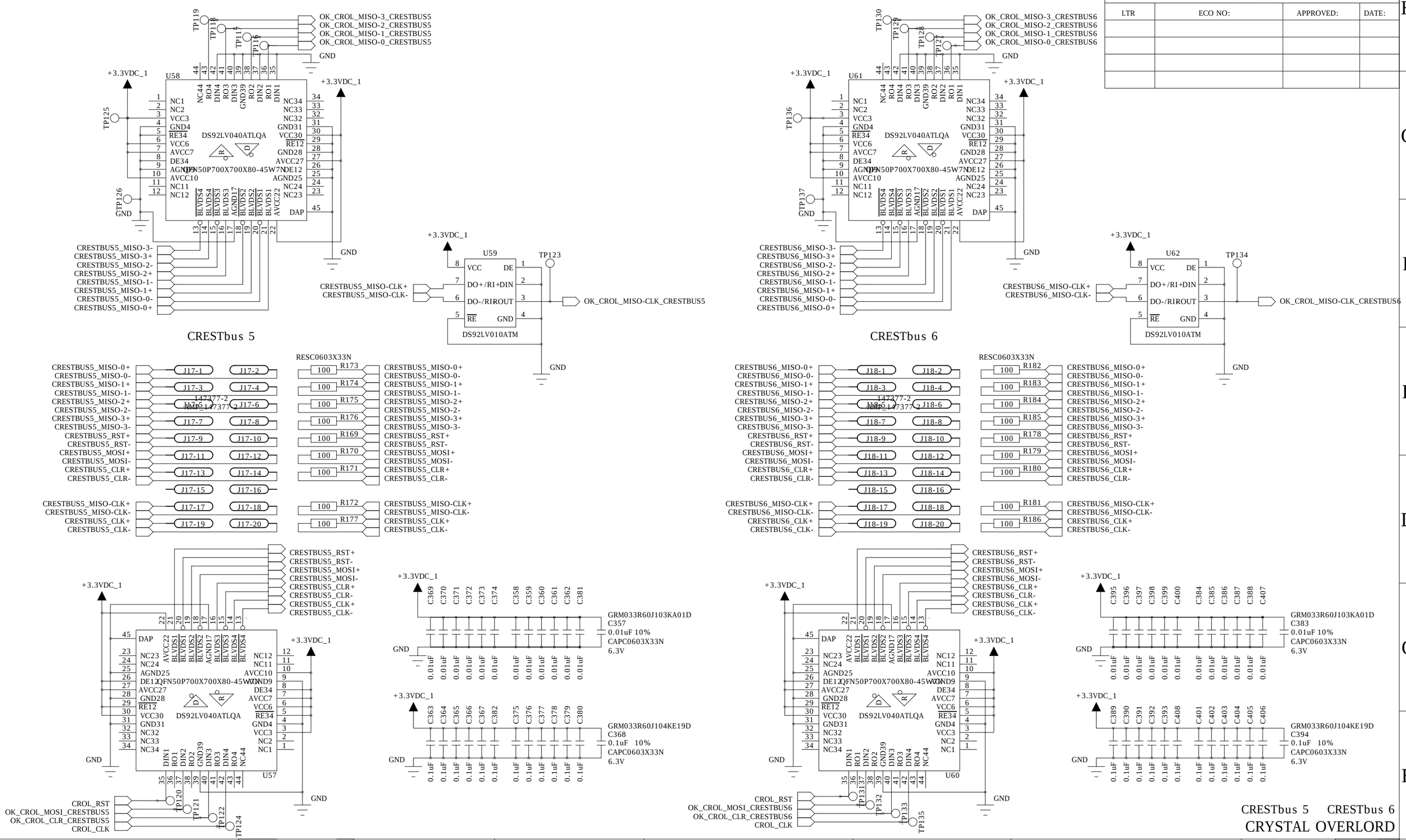

CRESTbus 5 CRESTbus 6

CRYSTAL OVERLORD

TITLE: CREST - XEM CARRIER	REV: B3	DRAWN: J.Ameel	CHECKED: <Checked By>	QUALITY CONTROL: <QC By>	RELEASED: <Released By>	DRAWING NO: 001	SCALE: 1:1	SIZE: B
FILENAME: XEM-CARRIER-B3.sch	SAVED: 1/27/2010	DATED: 20091103	DATED: <Checked Date>	DATED: <QC Date>	DATED: <Release Date>	COMPANY: Univ. of Michigan - Physics	SHEET: 20 OF 48

REVISION RECORD			
LTR	ECO NO:	APPROVED:	DATE:

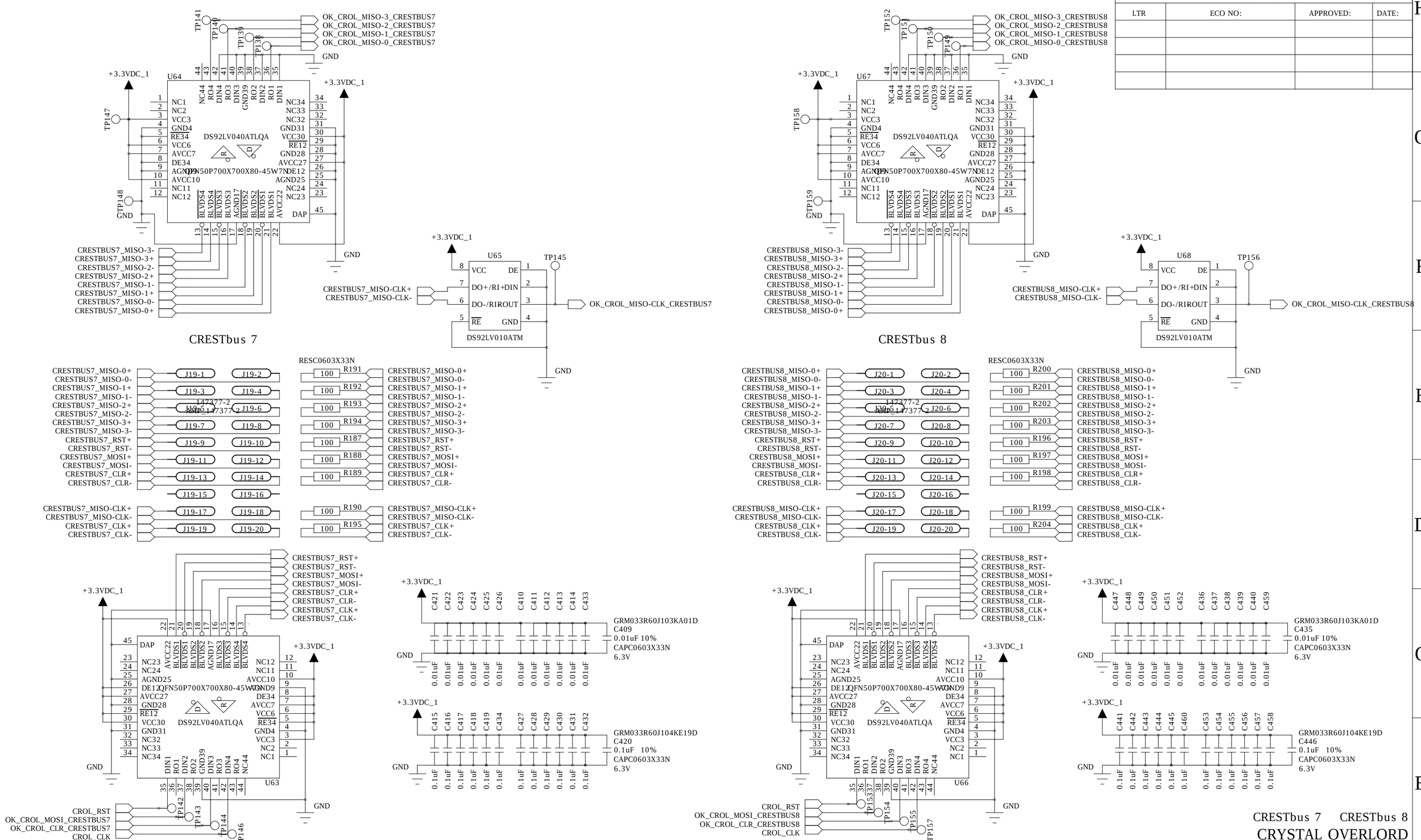

CRESTbus 7 CRESTbus 8

CRYSTAL OVERLORD

TITLE: CREST - XEM CARRIER	REV: B3	DRAWN: J.Ameel	CHECKED: <Checked By>	QUALITY CONTROL: <QC By>	RELEASED: <Released By>	DRAWING NO: 001	SCALE: 1:1	SIZE: B
FILENAME: XEM-CARRIER-B3.sch	SAVED: 1/27/2010	DATED: 20091103	DATED: <Checked Date>	DATED: <QC Date>	DATED: <Release Date>	COMPANY: Univ. of Michigan - Physics	SHEET: 21 OF 48	

REVISION RECORD			
LTR	ECO NO:	APPROVED:	DATE:

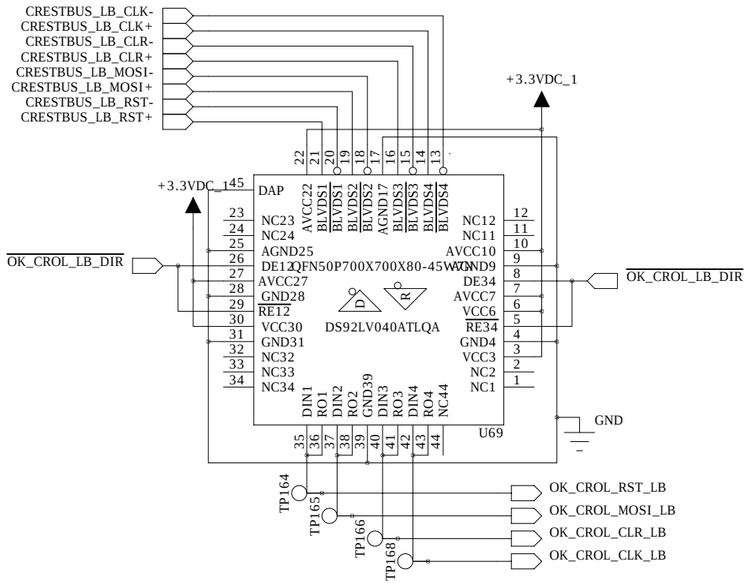

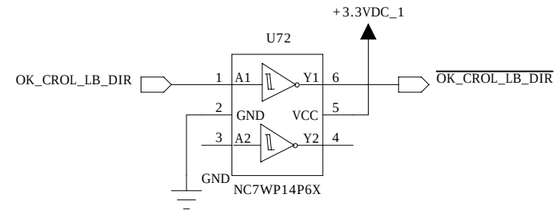

NOTE:
OK_CROL_LB_DIR controls the direction of the loopback port
Normal operation receives CRESTbus signals and sends them to the CROL.
OK_CROL_LB_DIR = 1
The loopback port can also be used as an extra CRESTbus port.
OK_CROL_LB_DIR = 0
The XEM3050 must control the OK_CROL_*_LB version
of the CRESTbus signals to make use of this channel

CRESTbus Loopback

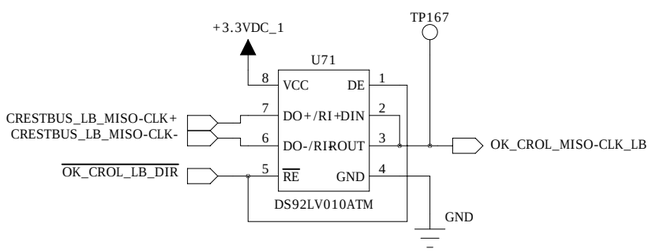

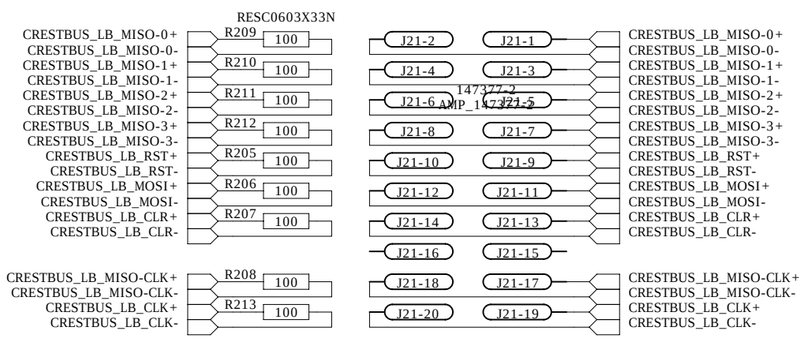

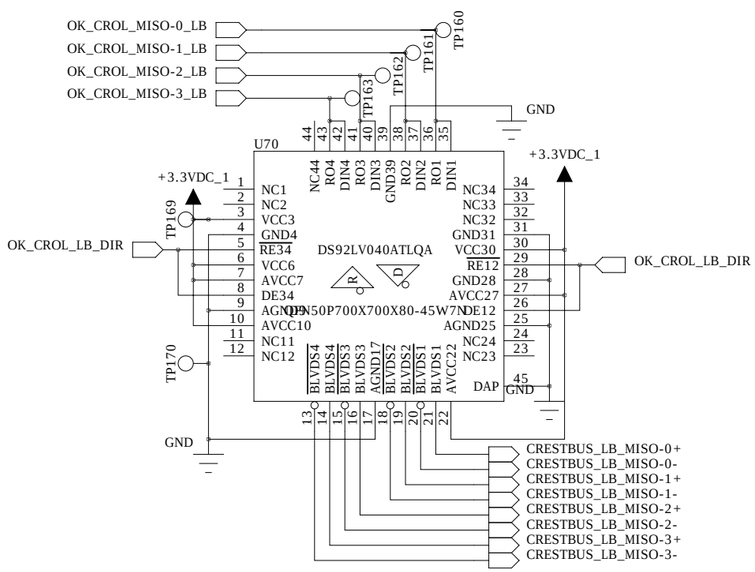

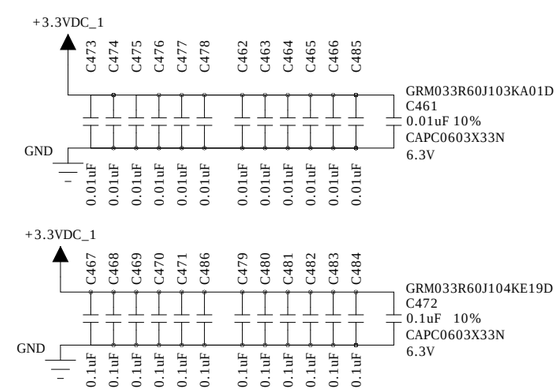

CRESTbus loopback
CRYSTAL OVERLORD

TITLE: CREST - XEM CARRIER	REV: B3	DRAWN: J.Ameel	CHECKED: <Checked By>	QUALITY CONTROL: <QC By>	RELEASED: <Released By>	DRAWING NO: 001	SCALE: 1:1	SIZE: B
FILENAME: XEM-CARRIER-B3.sch	SAVED: 1/27/2010	DATED: 20091103	DATED: <Checked Date>	DATED: <QC Date>	DATED: <Release Date>	COMPANY: Univ. of Michigan - Physics	SHEET: 22 OF 48	

REVISION RECORD			
LTR	ECO NO:	APPROVED:	DATE:

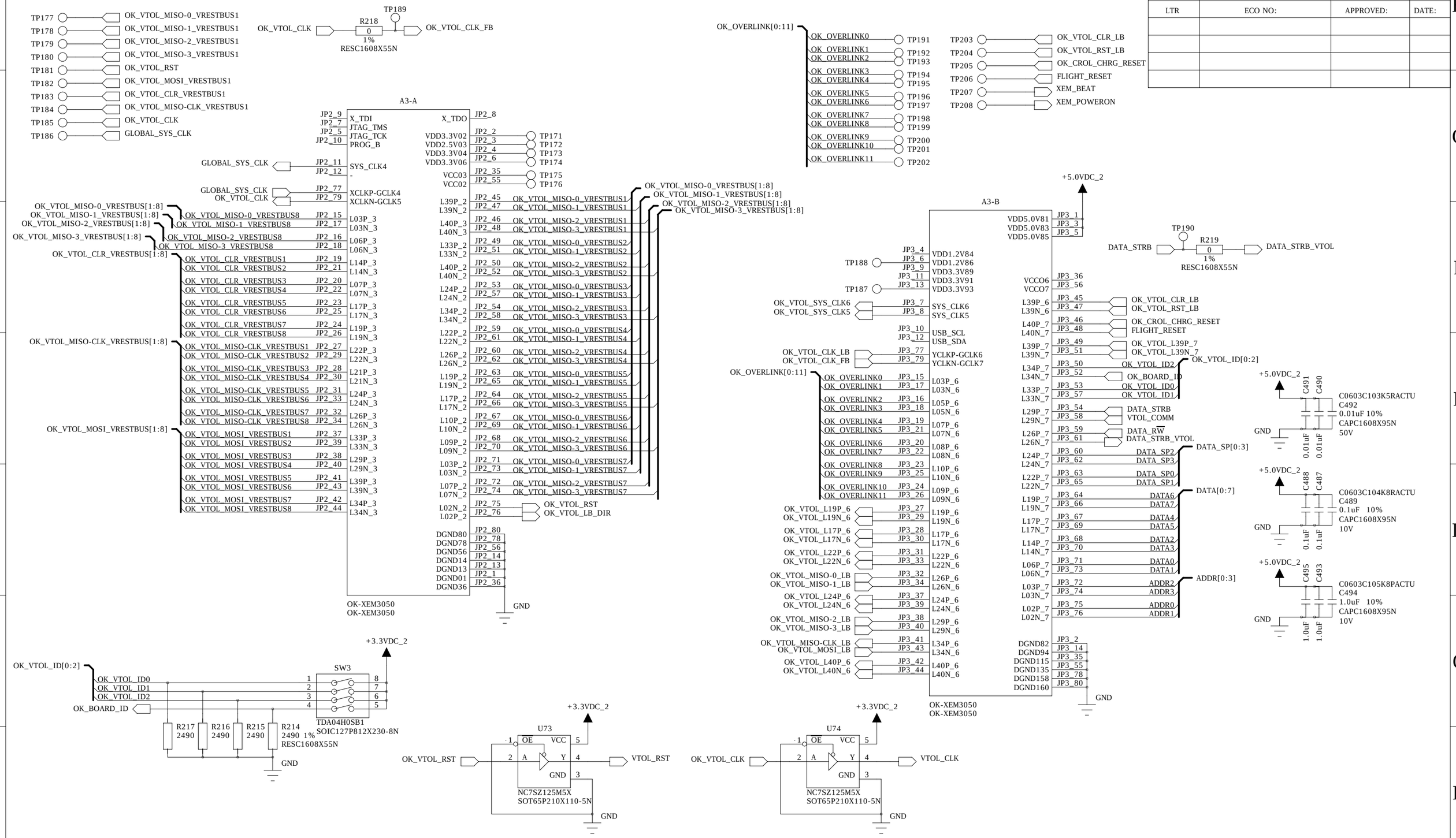

VETO OVERLORD

TITLE: CREST - XEM CARRIER	REV: B3	DRAWN: J.Ameel	CHECKED: <Checked By>	QUALITY CONTROL: <QC By>	RELEASED: <Released By>	DRAWING NO: 001	SCALE: 1:1	SIZE: B
FILENAME: XEM-CARRIER-B3.sch	SAVED: 1/27/2010	DATED: 20091103	DATED: <Checked Date>	DATED: <QC Date>	DATED: <Release Date>	COMPANY: Univ. of Michigan - Physics	SHEET: 23 OF 48	

REVISION RECORD			
LTR	ECO NO:	APPROVED:	DATE:

VRESTbus Spy Diagnostic

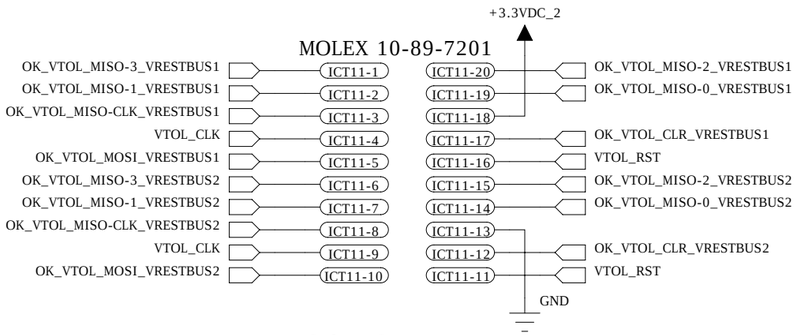

VRESTbus Spy Diagnostic

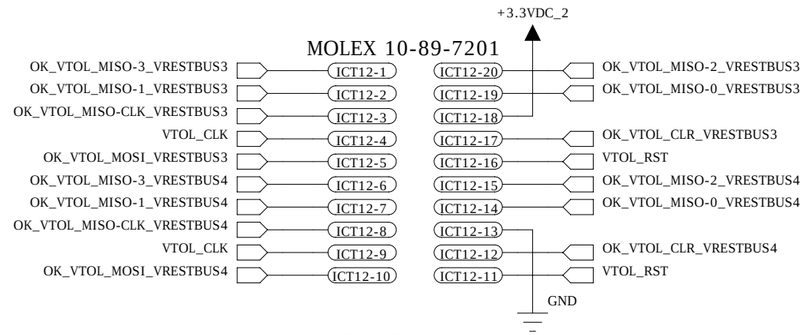

VRESTbus Spy Diagnostic

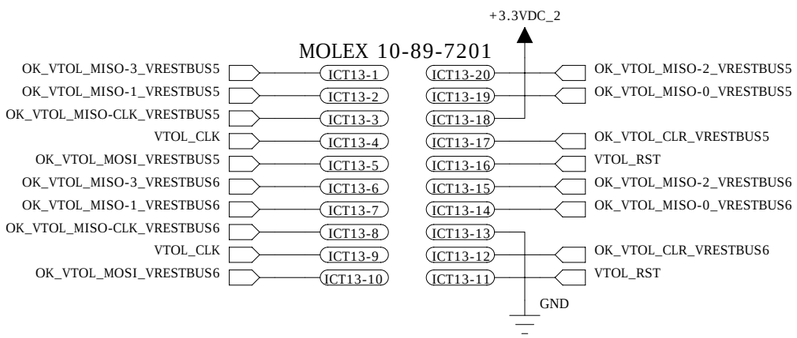

VRESTbus Spy Diagnostic

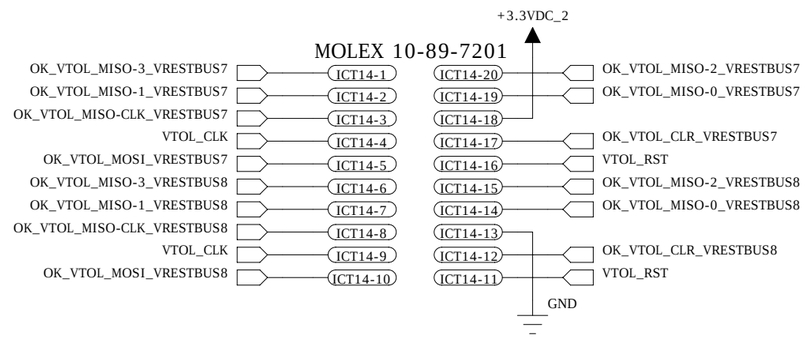

VRESTbus LoopBack Diagnostic

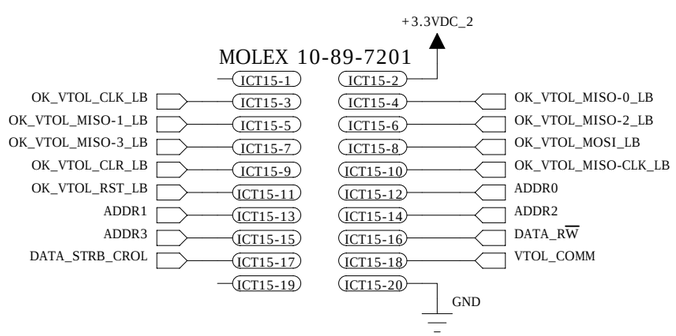

VRESTbus SPARES

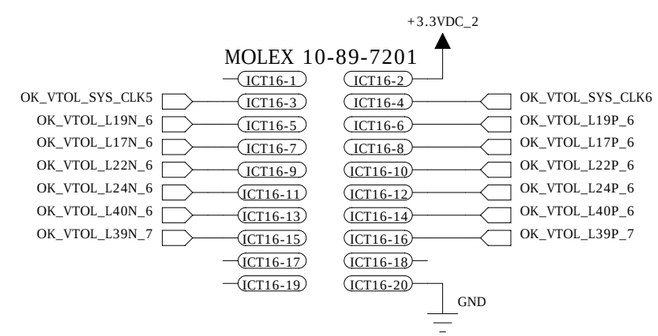

VETO OVERLORD

TITLE: CREST - XEM CARRIER	REV: B3	DRAWN: J.Ameel	CHECKED: <Checked By>	QUALITY CONTROL: <QC By>	RELEASED: <Released By>	DRAWING NO: 001	SCALE: 1:1	SIZE: B
FILENAME: XEM-CARRIER-B3.sch	SAVED: 1/27/2010	DATED: 20091103	DATED: <Checked Date>	DATED: <QC Date>	DATED: <Release Date>	COMPANY: Univ. of Michigan - Physics	SHEET: 24 OF 48

REVISION RECORD			
LTR	ECO NO:	APPROVED:	DATE:

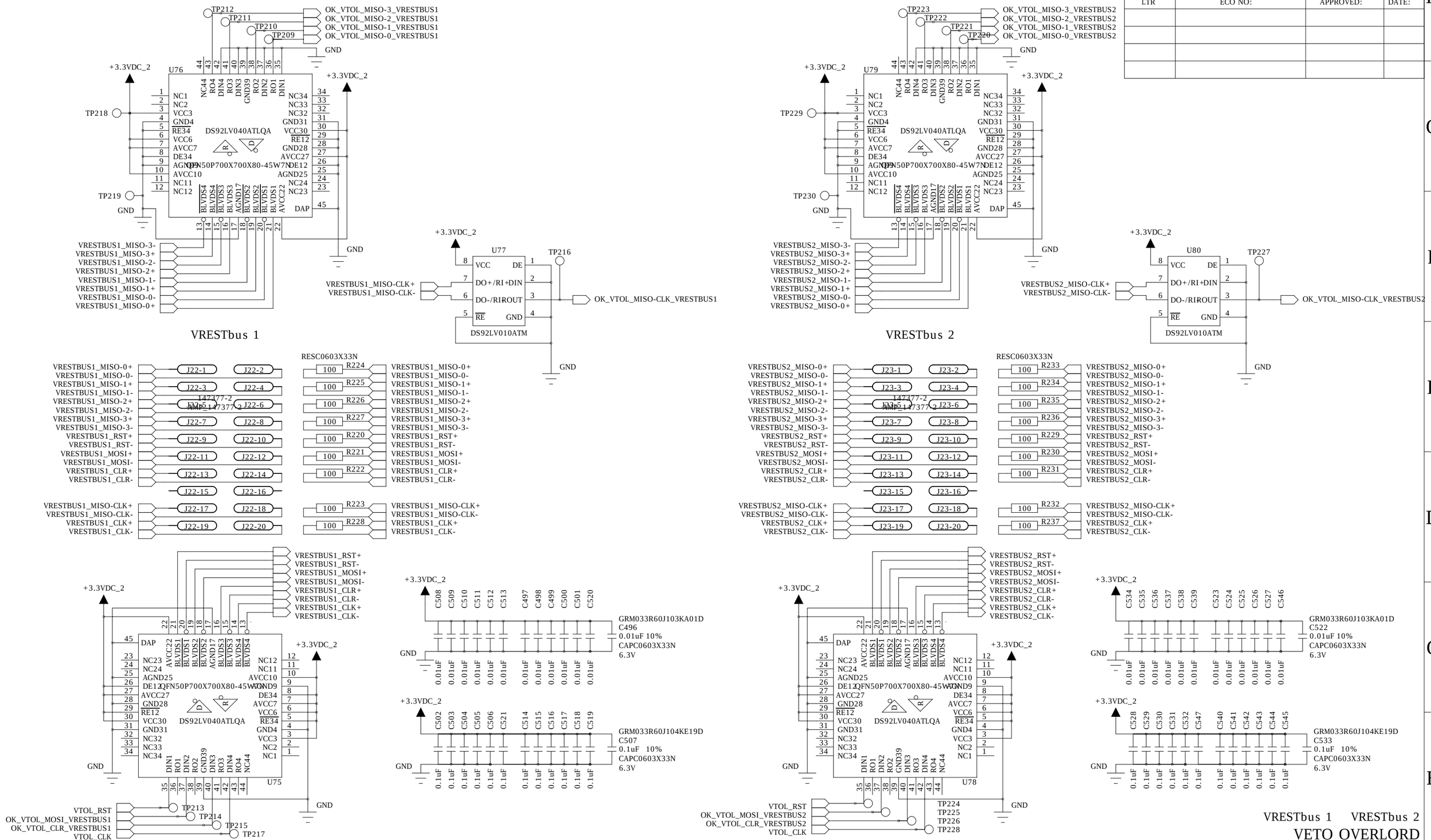

VRESTbus 1 VRESTbus 2

VETO OVERLORD

TITLE: CREST - XEM CARRIER	REV: B3	DRAWN: J.Ameel	CHECKED: <Checked By>	QUALITY CONTROL: <QC By>	RELEASED: <Released By>	DRAWING NO: 001	SCALE: 1:1	SIZE: B
FILENAME: XEM-CARRIER-B3.sch	SAVED: 1/27/2010	DATED: 20091103	DATED: <Checked Date>	DATED: <QC Date>	DATED: <Release Date>	COMPANY: Univ. of Michigan - Physics	SHEET: 25 OF 48	

REVISION RECORD			
LTR	ECO NO:	APPROVED:	DATE:

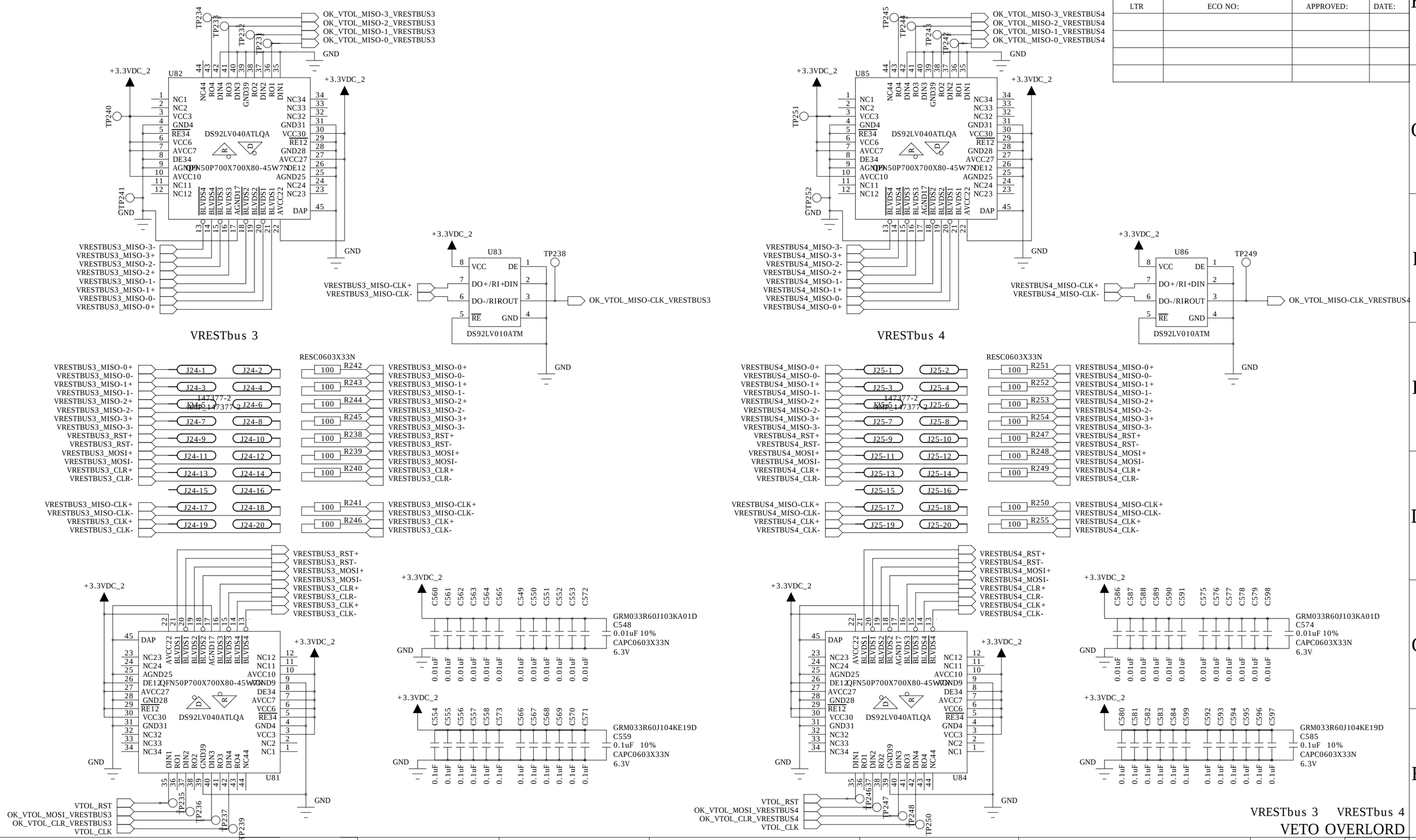

TITLE: CREST - XEM CARRIER	REV: B3	DRAWN: J.Ameel	CHECKED: <Checked By>	QUALITY CONTROL: <QC By>	RELEASED: <Released By>	DRAWING NO: 001	SCALE: 1:1	SIZE: B
FILENAME: XEM-CARRIER-B3.sch	SAVED: 1/27/2010	DATED: 20091103	DATED: <Checked Date>	DATED: <QC Date>	DATED: <Release Date>	COMPANY: Univ. of Michigan - Physics	SHEET: 26 OF 48	

REVISION RECORD			
LTR	ECO NO:	APPROVED:	DATE:

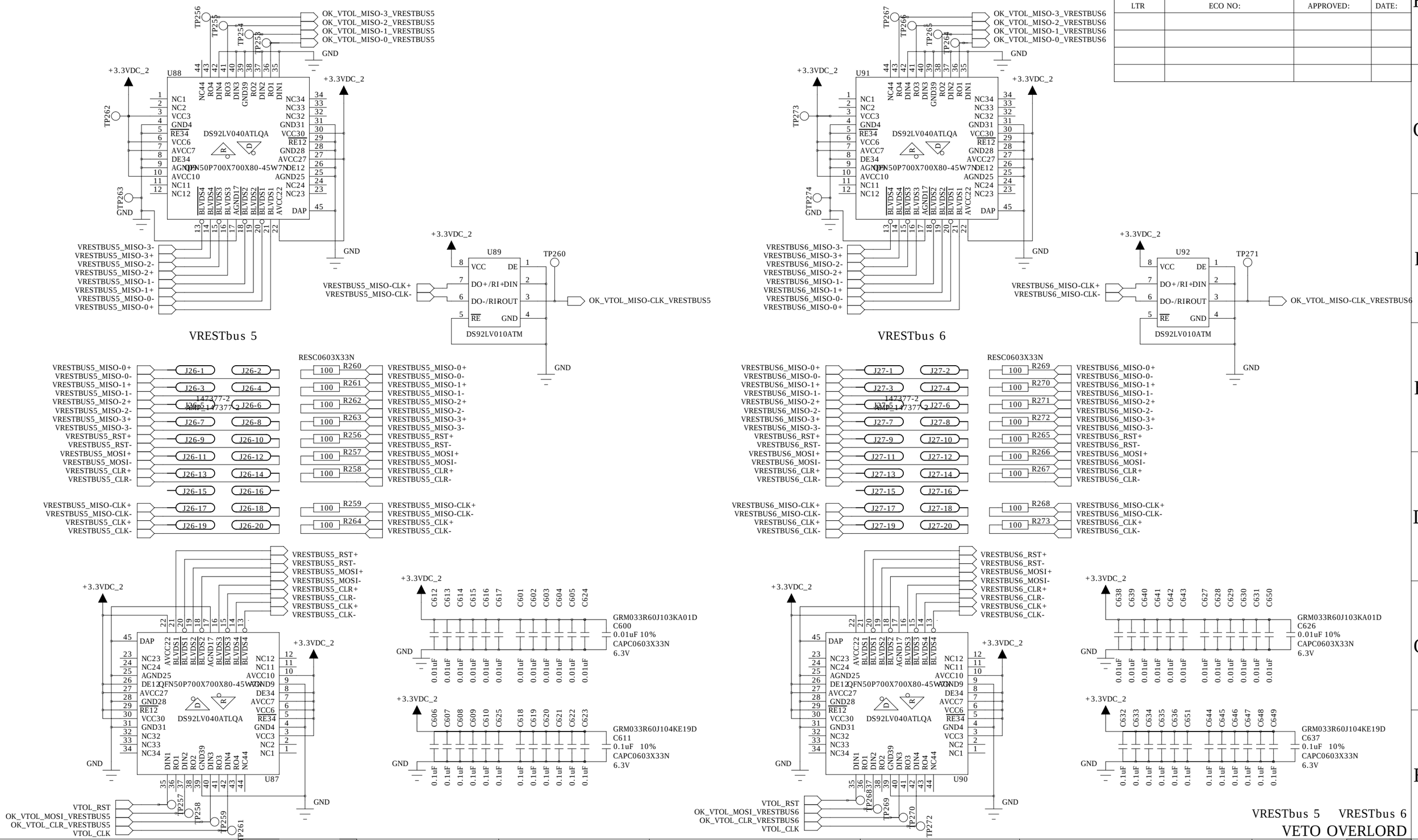

VRESTbus 5 VRESTbus 6

VETO OVERLORD

TITLE: CREST - XEM CARRIER	REV: B3	DRAWN: J.Ameel	CHECKED: <Checked By>	QUALITY CONTROL: <QC By>	RELEASED: <Released By>	DRAWING NO: 001	SCALE: 1:1	SIZE: B
FILENAME: XEM-CARRIER-B3.sch	SAVED: 1/27/2010	DATED: 20091103	DATED: <Checked Date>	DATED: <QC Date>	DATED: <Release Date>	COMPANY: Univ. of Michigan - Physics	SHEET: 27 OF 48

REVISION RECORD			
LTR	ECO NO:	APPROVED:	DATE:

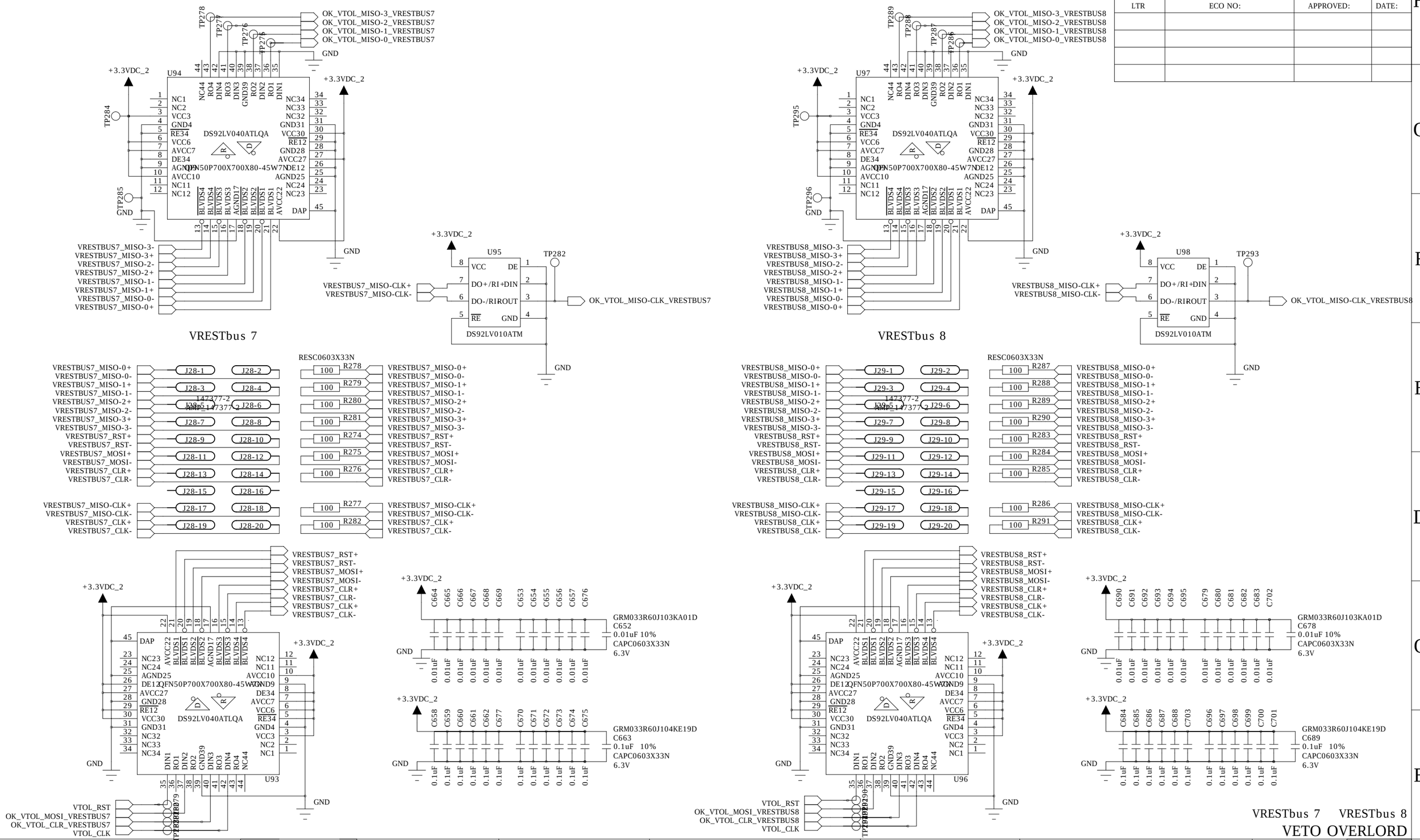

TITLE: CREST - XEM CARRIER	REV: B3	DRAWN: J.Ameel	CHECKED: <Checked By>	QUALITY CONTROL: <QC By>	RELEASED: <Released By>	DRAWING NO: 001	SCALE: 1:1	SIZE: B
FILENAME: XEM-CARRIER-B3.sch	SAVED: 1/27/2010	DATED: 20091103	DATED: <Checked Date>	DATED: <QC Date>	DATED: <Release Date>	COMPANY: Univ. of Michigan - Physics	SHEET: 28 OF 48

REVISION RECORD			
LTR	ECO NO:	APPROVED:	DATE:

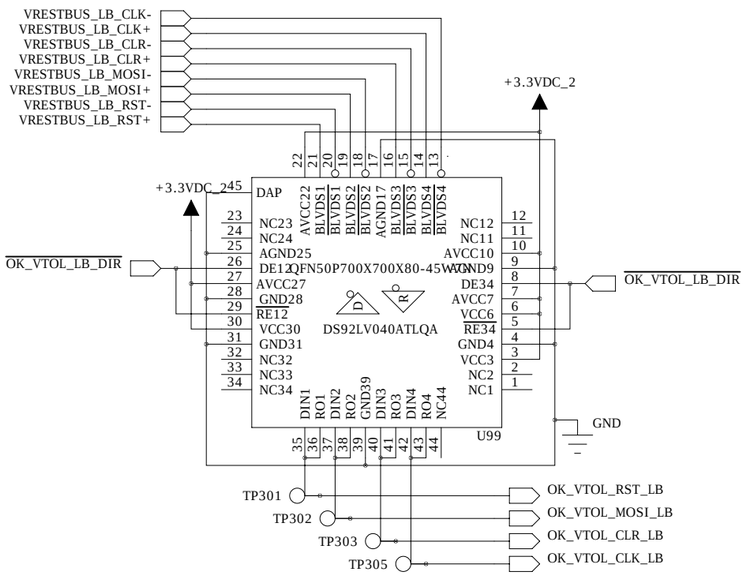

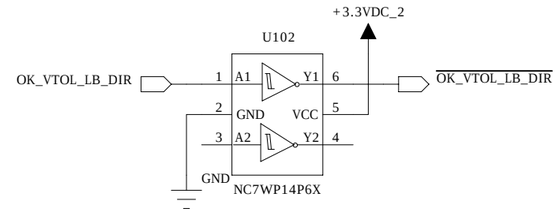

NOTE:
OK_VTOL_LB_DIR controls the direction of the loopback port
Normal operation receives VRESTbus signals and sends them to the VTOL.
OK_VTOL_LB_DIR = 1
The loopback port can also be used as an extra VRESTbus port.
OK_VTOL_LB_DIR = 0
The XEM3050 must control the OK_VTOL_*_LB version
of the VRESTbus signals to make use of this channel

VRESTbus Loopback

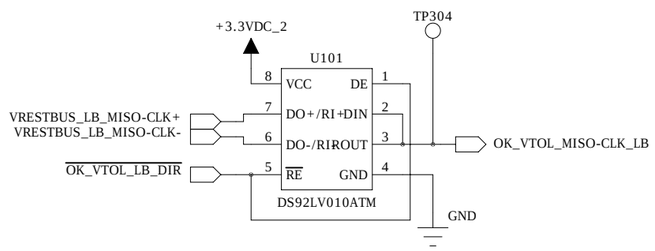

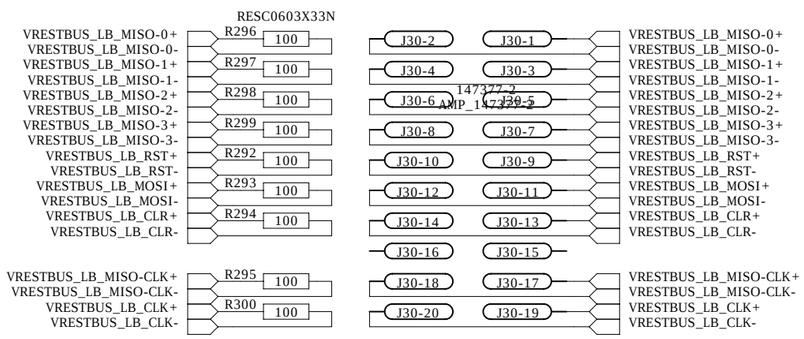

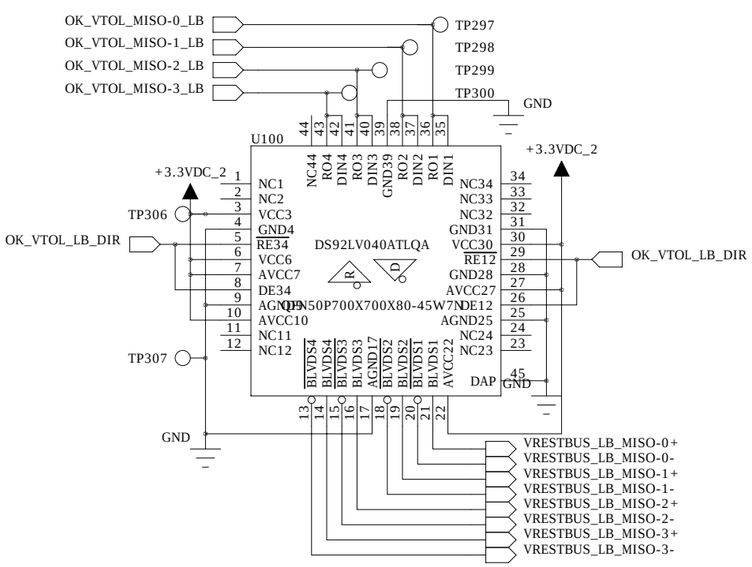

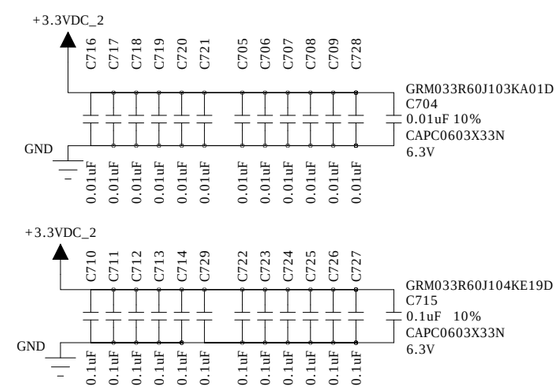

VRESTbus loopback
VETO OVERLORD

TITLE: CREST - XEM CARRIER	REV: B3	DRAWN: J.Ameel	CHECKED: <Checked By>	QUALITY CONTROL: <QC By>	RELEASED: <Released By>	DRAWING NO: 001	SCALE: 1:1	SIZE: B
FILENAME: XEM-CARRIER-B3.sch	SAVED: 1/27/2010	DATED: 20091103	DATED: <Checked Date>	DATED: <QC Date>	DATED: <Release Date>	COMPANY: Univ. of Michigan - Physics	SHEET: 29 OF 48

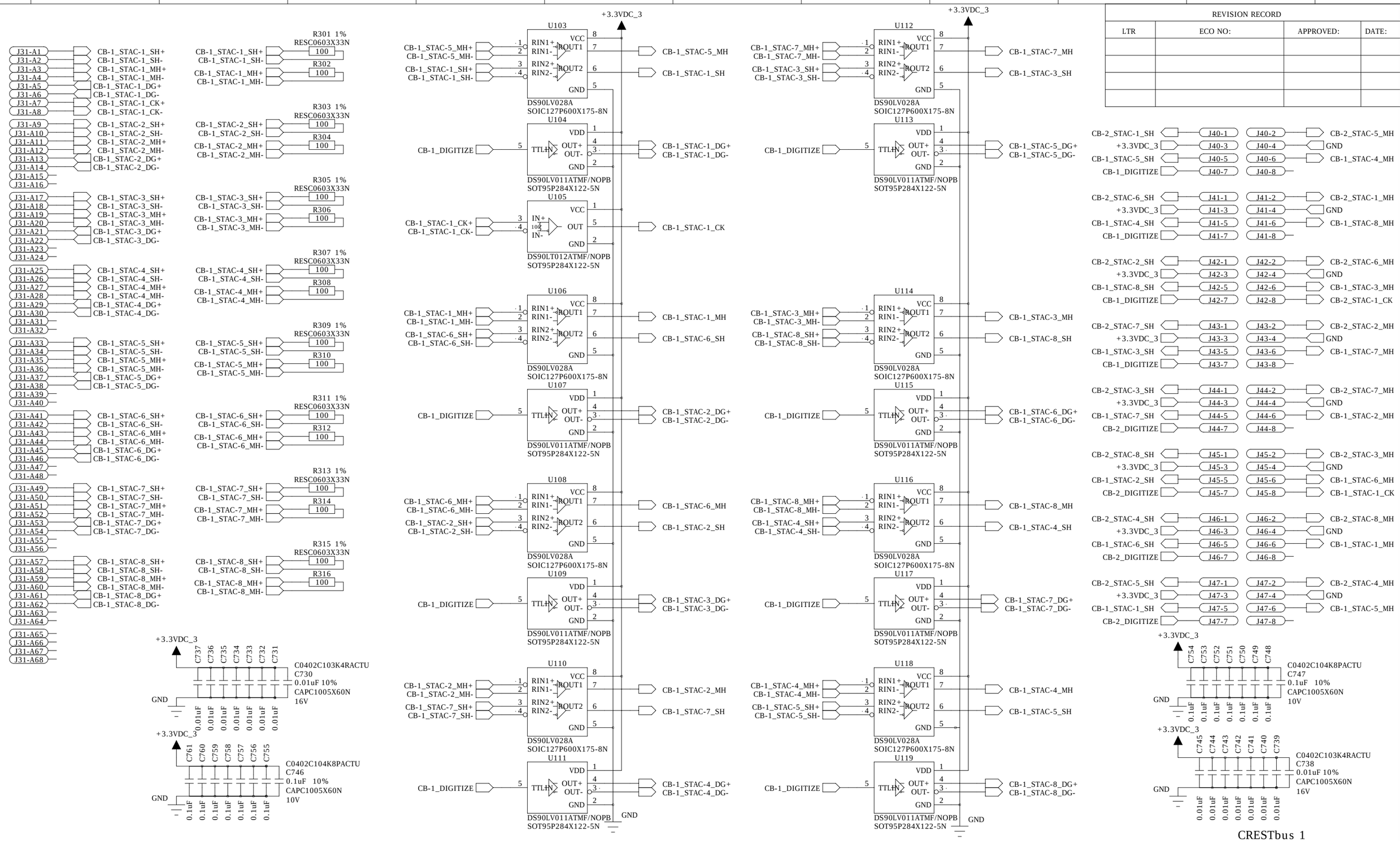

REVISION RECORD			
LTR	ECO NO:	APPROVED:	DATE:

CRESTbus 1

DIGITIZE DECISION

TITLE: CREST - XEM CARRIER	REV: B3	DRAWN: J.Ameel	CHECKED: <Checked By>	QUALITY CONTROL: <QC By>	RELEASED: <Released By>	DRAWING NO: 001	SCALE: 1:1	SIZE: B
FILENAME: XEM-CARRIER-B3.sch	SAVED: 1/27/2010	DATED: 20091103	DATED: <Checked Date>	DATED: <QC Date>	DATED: <Release Date>	COMPANY: Univ. of Michigan - Physics	SHEET: 30 OF 48

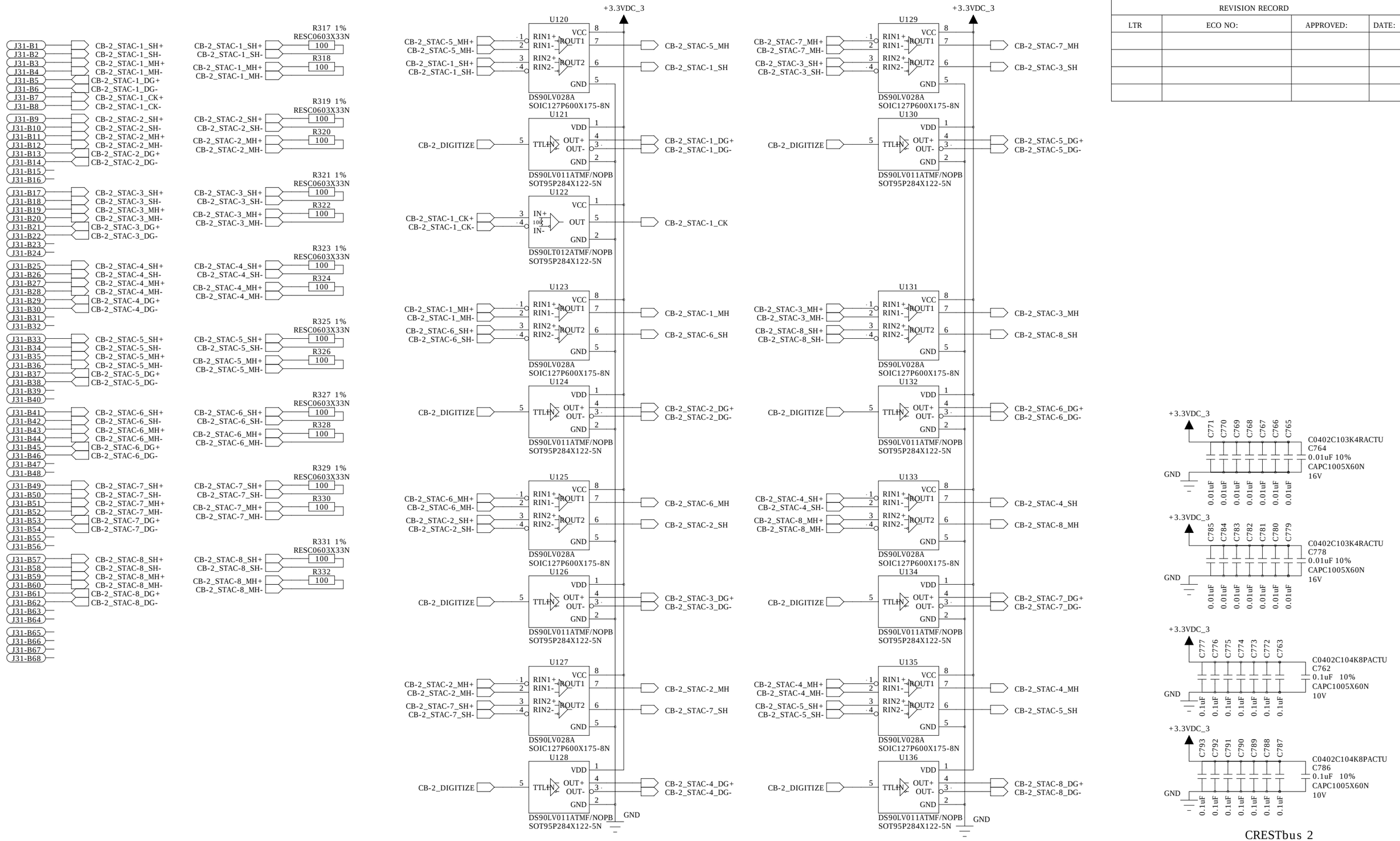

REVISION RECORD			
LTR	ECO NO:	APPROVED:	DATE:

CRESTbus 2

DIGITIZE DECISION

TITLE: CREST - XEM CARRIER	REV: B3	DRAWN: J.Ameel	CHECKED: <Checked By>	QUALITY CONTROL: <QC By>	RELEASED: <Released By>	DRAWING NO: 001	SCALE: 1:1	SIZE: B
FILENAME: XEM-CARRIER-B3.sch	SAVED: 1/27/2010	DATED: 20091103	DATED: <Checked Date>	DATED: <QC Date>	DATED: <Release Date>	COMPANY: Univ. of Michigan - Physics	SHEET: 31 OF 48	

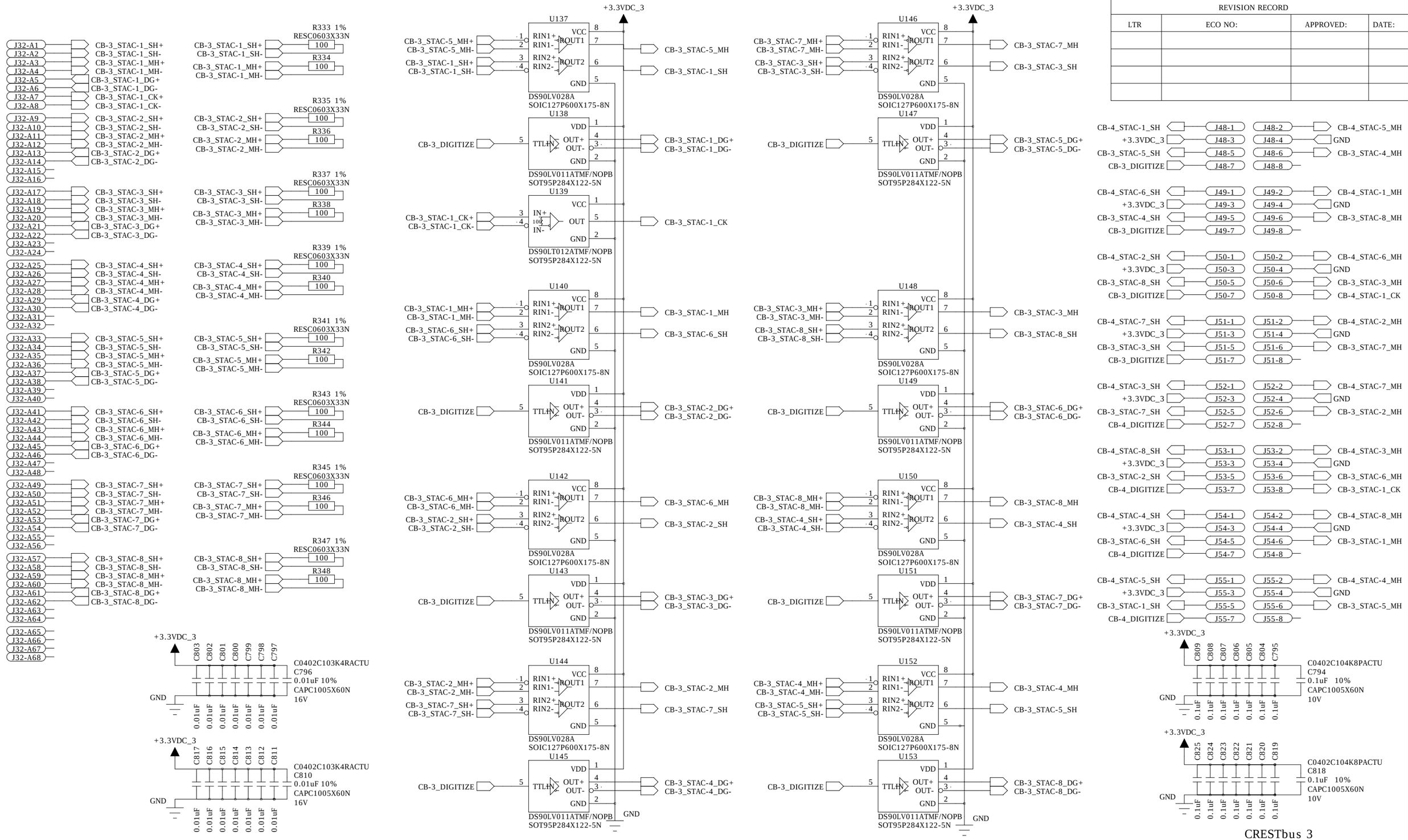

REVISION RECORD			
LTR	ECO NO:	APPROVED:	DATE:

DIGITIZE DECISION

TITLE: CREST - XEM CARRIER	REV: B3	DRAWN: J.Ameel	CHECKED: <Checked By>	QUALITY CONTROL: <QC By>	RELEASED: <Released By>	DRAWING NO: 001	SCALE: 1:1	SIZE: B
FILENAME: XEM-CARRIER-B3.sch	SAVED: 1/27/2010	DATED: 20091103	DATED: <Checked Date>	DATED: <QC Date>	DATED: <Release Date>	COMPANY: Univ. of Michigan - Physics	SHEET: 32 OF 48

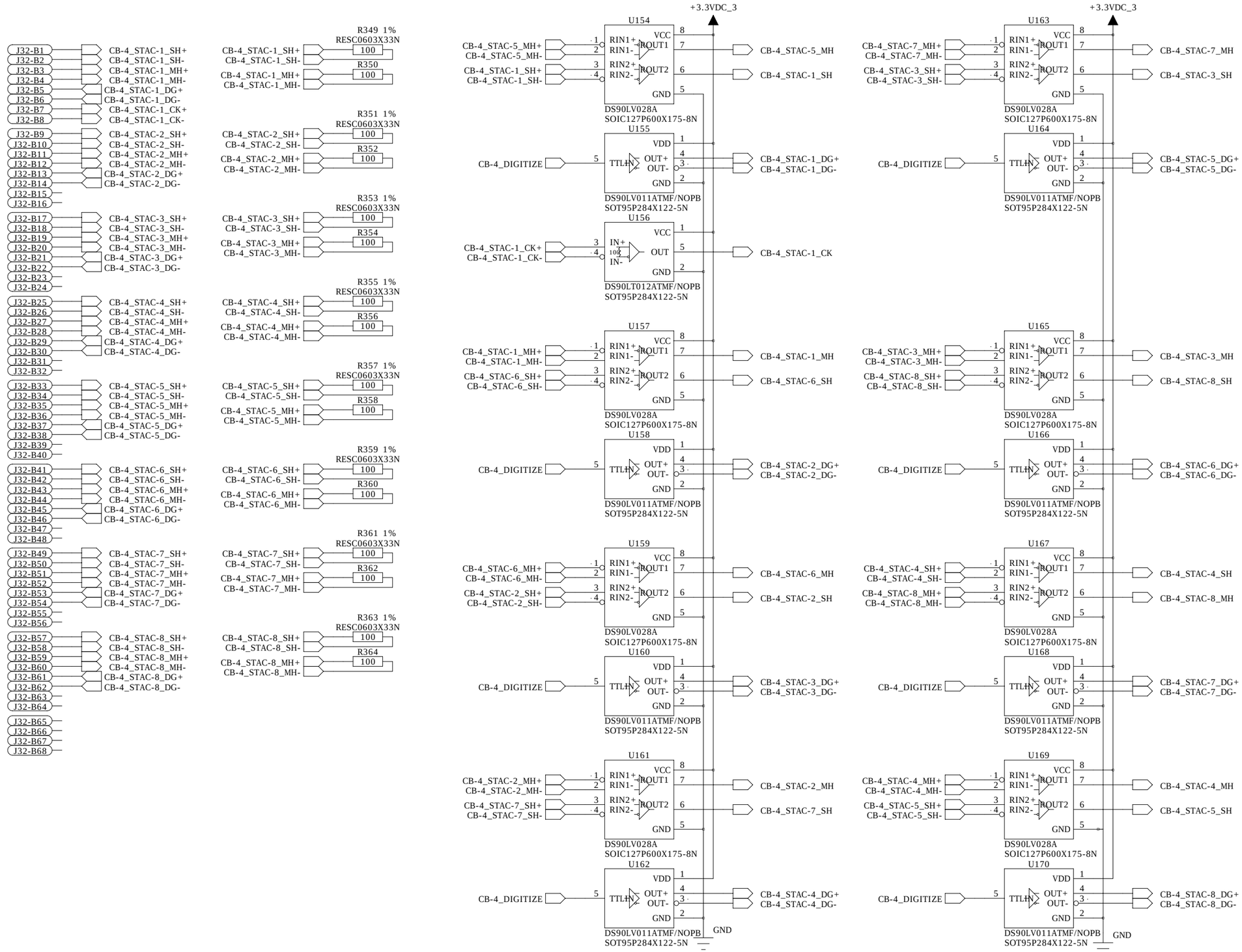

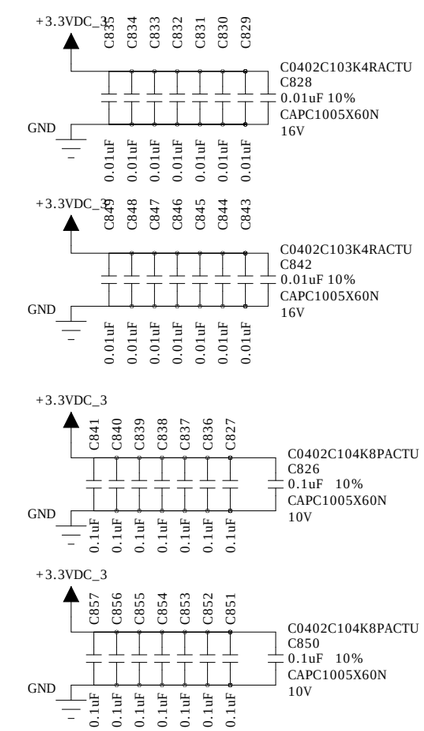

REVISION RECORD			
LTR	ECO NO:	APPROVED:	DATE:

CRESTbus 4

DIGITIZE DECISION

TITLE: CREST - XEM CARRIER	REV: B3	DRAWN: J.Ameel	CHECKED: <Checked By>	QUALITY CONTROL: <QC By>	RELEASED: <Released By>	DRAWING NO: 001	SCALE: 1:1	SIZE: B
FILENAME: XEM-CARRIER-B3.sch	SAVED: 1/27/2010	DATED: 20091103	DATED: <Checked Date>	DATED: <QC Date>	DATED: <Release Date>	COMPANY: Univ. of Michigan - Physics	SHEET: 33 OF 48	

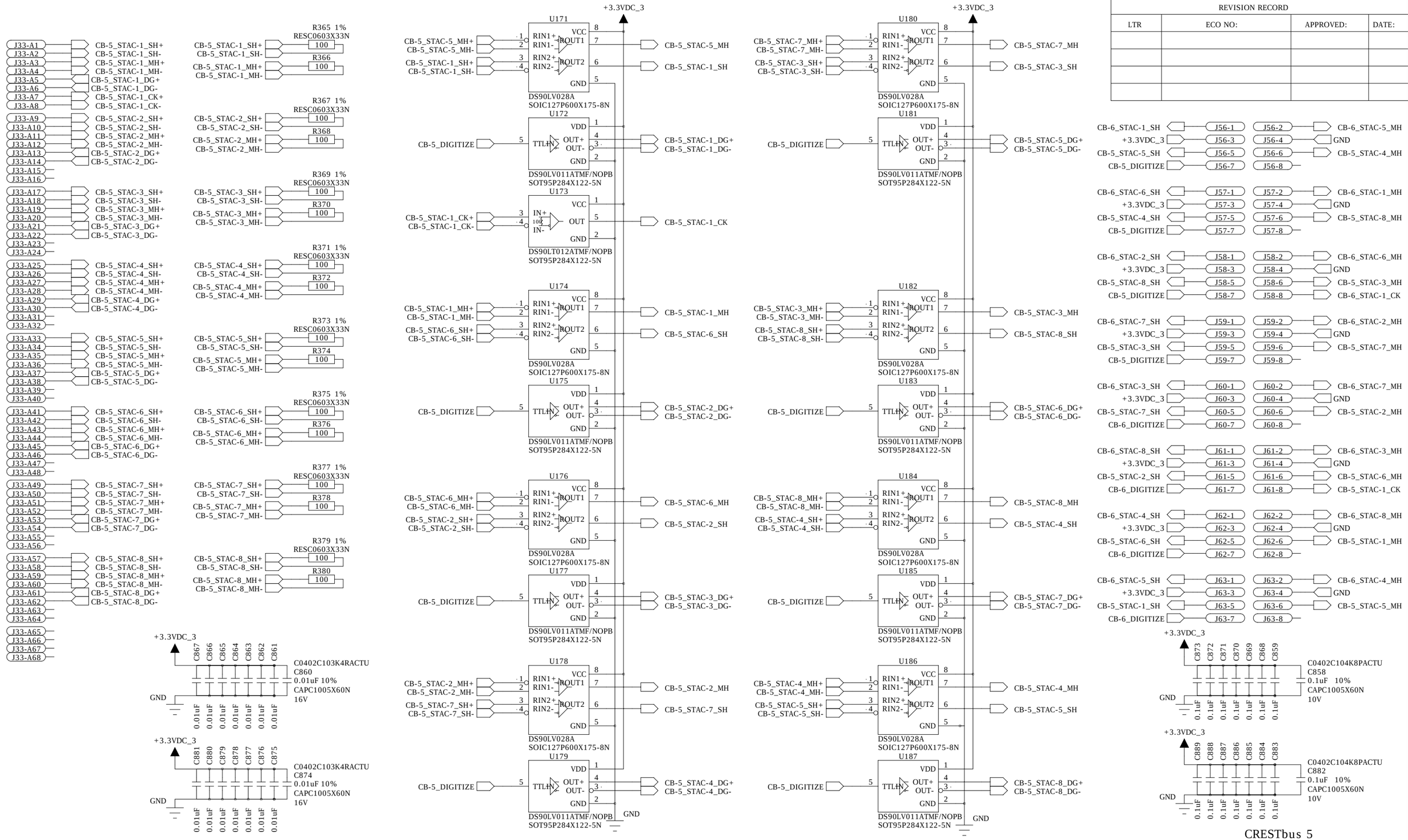

REVISION RECORD			
LTR	ECO NO:	APPROVED:	DATE:

DIGITIZE DECISION

TITLE: CREST - XEM CARRIER	REV: B3	DRAWN: J.Ameel	CHECKED: <Checked By>	QUALITY CONTROL: <QC By>	RELEASED: <Released By>	DRAWING NO: 001	SCALE: 1:1	SIZE: B
FILENAME: XEM-CARRIER-B3.sch	SAVED: 1/27/2010	DATED: 20091103	DATED: <Checked Date>	DATED: <QC Date>	DATED: <Release Date>	COMPANY: Univ. of Michigan - Physics	SHEET: 34 OF 48

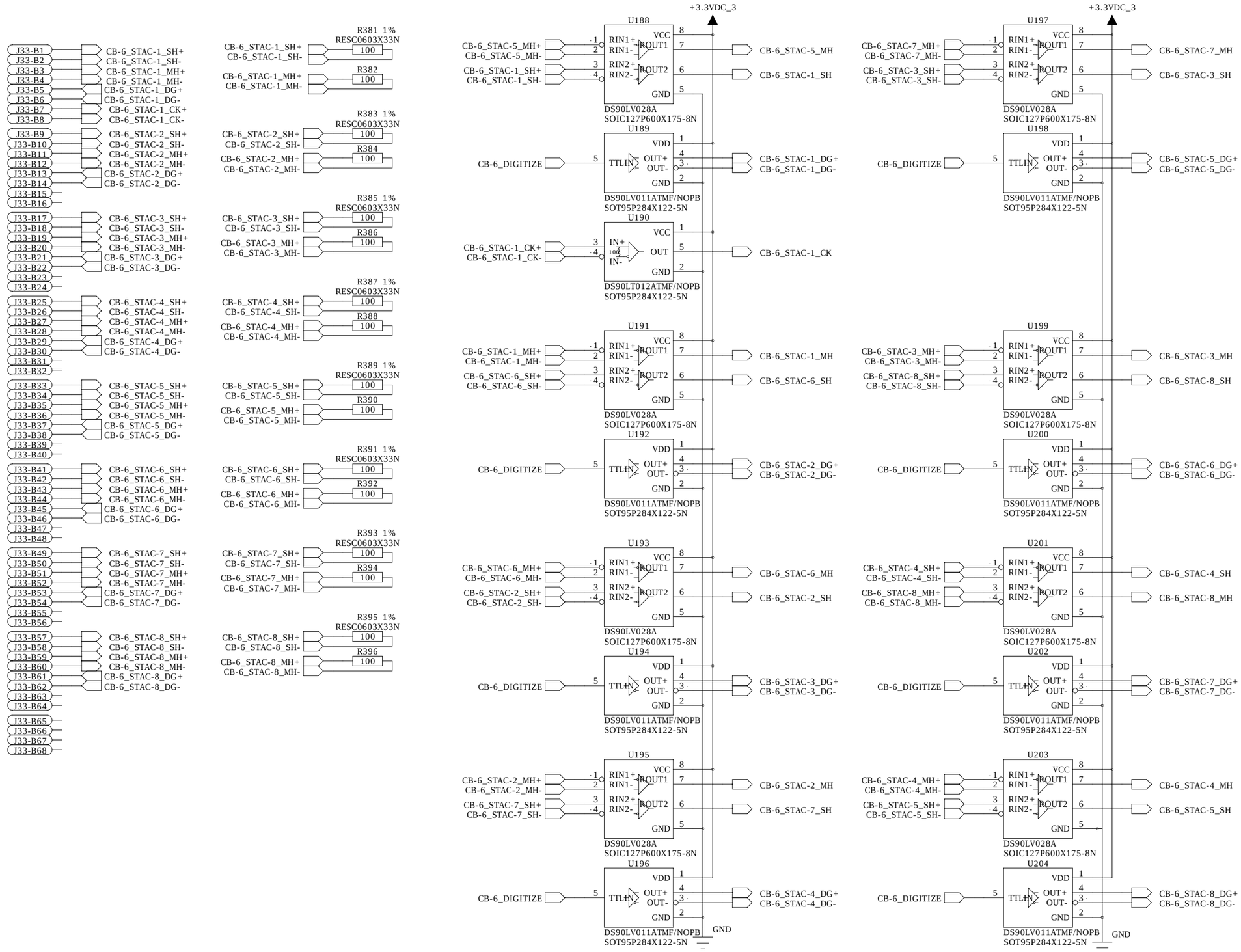

REVISION RECORD			
LTR	ECO NO:	APPROVED:	DATE:

CRESTbus 6

DIGITIZE DECISION

TITLE: CREST - XEM CARRIER	REV: B3	DRAWN: J.Ameel	CHECKED: <Checked By>	QUALITY CONTROL: <QC By>	RELEASED: <Released By>	DRAWING NO: 001	SCALE: 1:1	SIZE: B
FILENAME: XEM-CARRIER-B3.sch	SAVED: 1/27/2010	DATED: 20091103	DATED: <Checked Date>	DATED: <QC Date>	DATED: <Release Date>	COMPANY: Univ. of Michigan - Physics	SHEET: 35 OF 48	

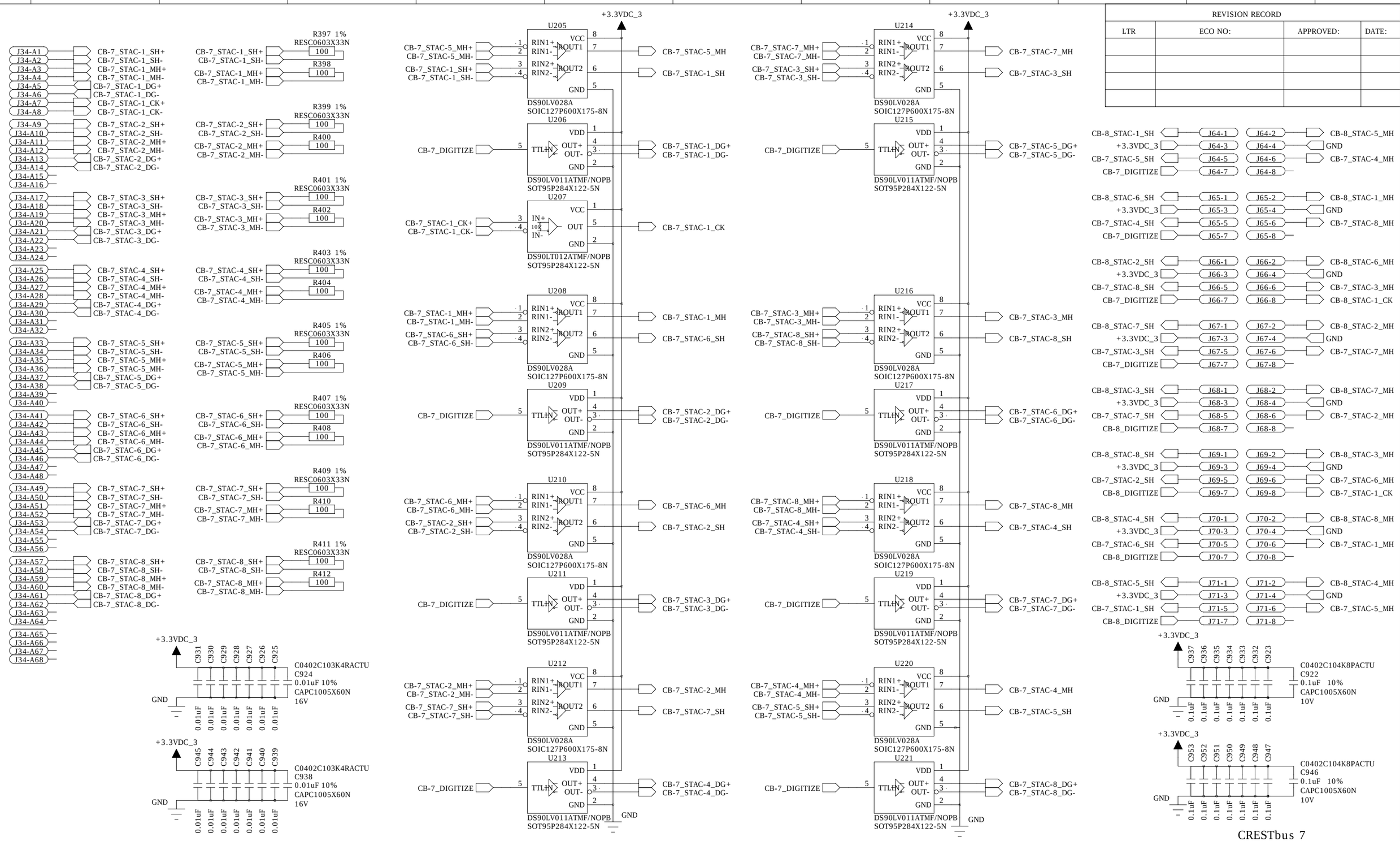

REVISION RECORD			
LTR	ECO NO:	APPROVED:	DATE:

DIGITIZE DECISION

TITLE: CREST - XEM CARRIER	REV: B3	DRAWN: J.Ameel	CHECKED: <Checked By>	QUALITY CONTROL: <QC By>	RELEASED: <Released By>	DRAWING NO: 001	SCALE: 1:1	SIZE: B
FILENAME: XEM-CARRIER-B3.sch	SAVED: 1/27/2010	DATED: 20091103	DATED: <Checked Date>	DATED: <QC Date>	DATED: <Release Date>	COMPANY: Univ. of Michigan - Physics	SHEET: 36 OF 48

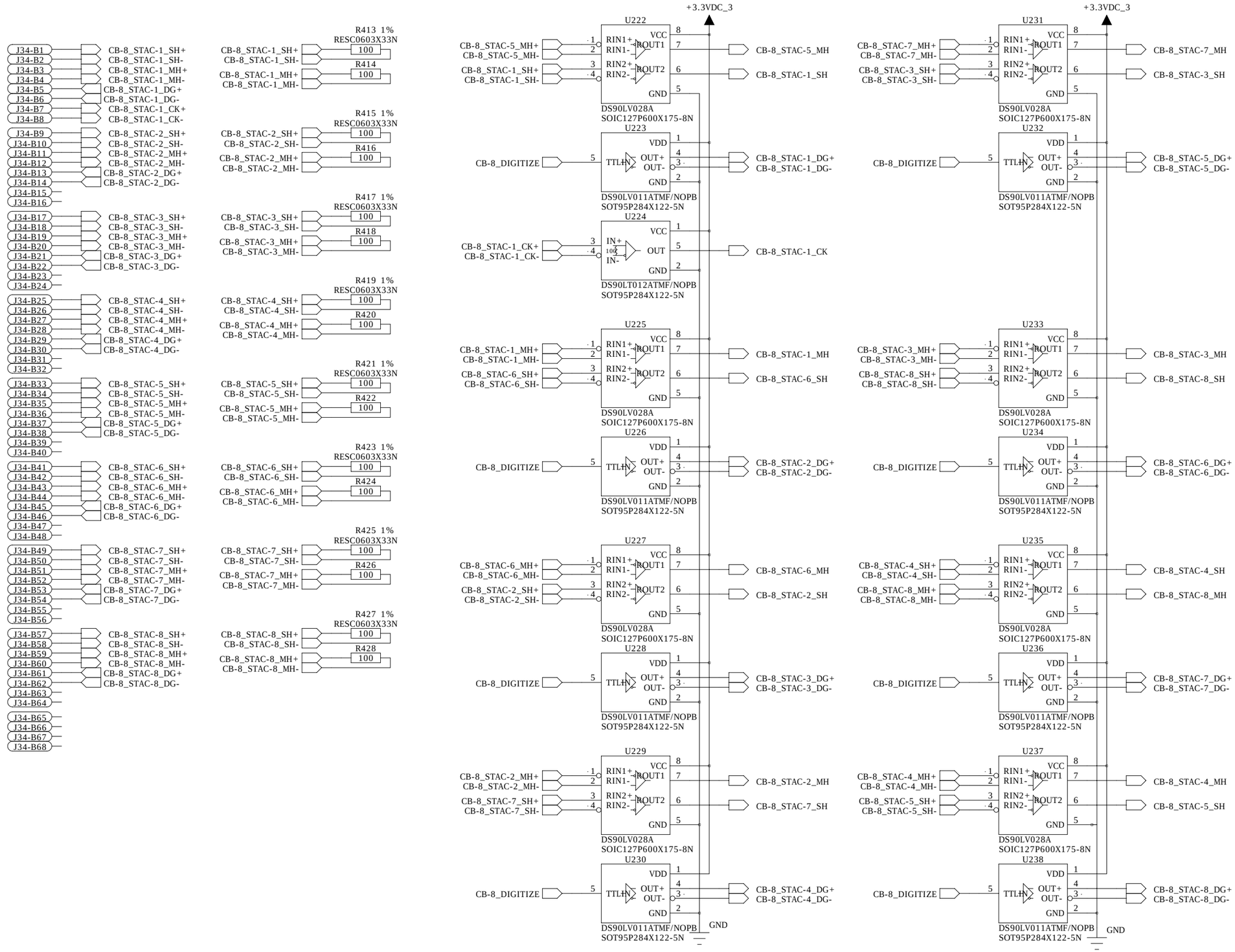

REVISION RECORD			
LTR	ECO NO:	APPROVED:	DATE:

CRESTbus 8

DIGITIZE DECISION

TITLE: CREST - XEM CARRIER	REV: B3	DRAWN: J.Ameel	CHECKED: <Checked By>	QUALITY CONTROL: <QC By>	RELEASED: <Released By>	DRAWING NO: 001	SCALE: 1:1	SIZE: B
FILENAME: XEM-CARRIER-B3.sch	SAVED: 1/27/2010	DATED: 20091103	DATED: <Checked Date>	DATED: <QC Date>	DATED: <Release Date>	COMPANY: Univ. of Michigan - Physics	SHEET: 37 OF 48	

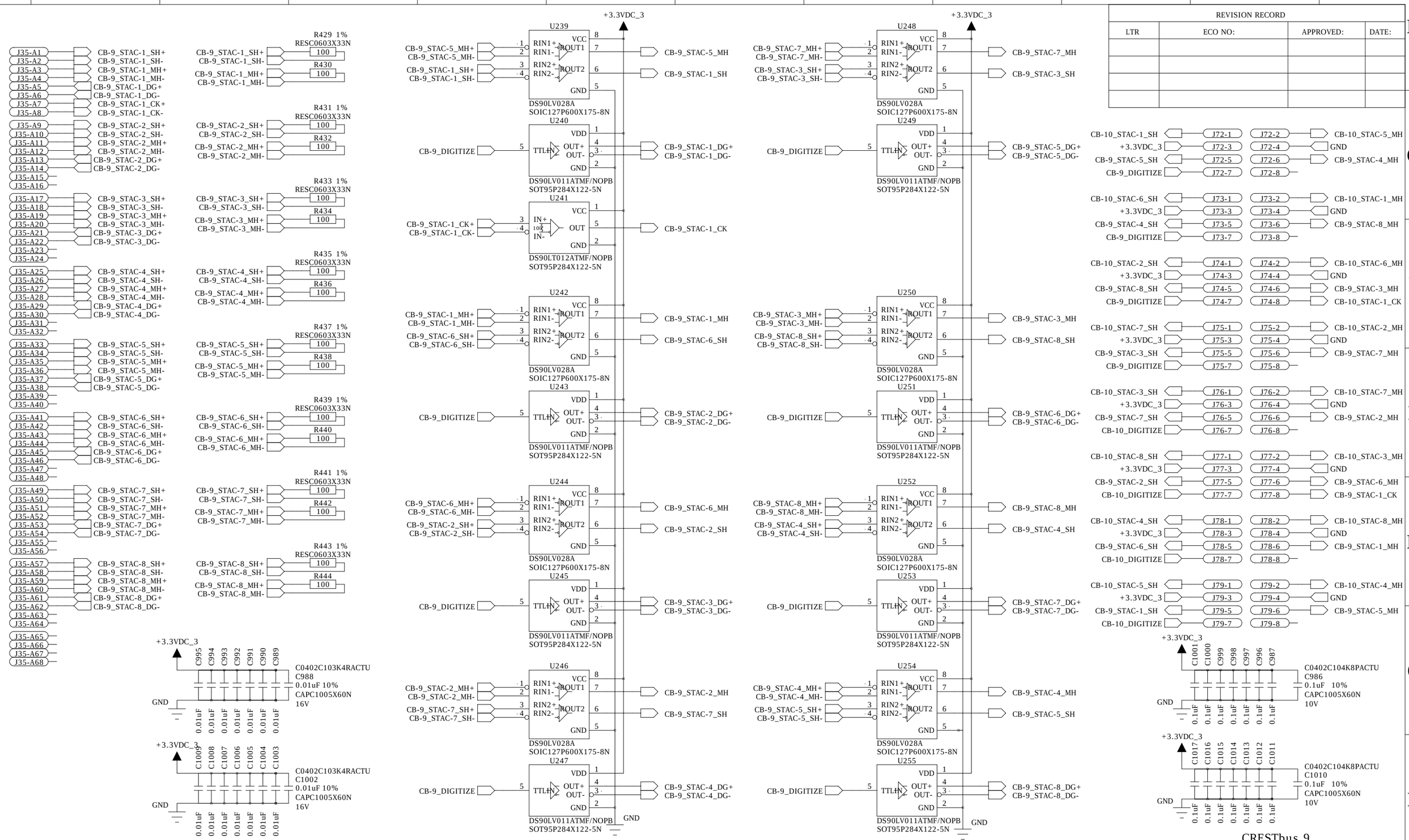

REVISION RECORD			
LTR	ECO NO:	APPROVED:	DATE:

CRESTbus 9

DIGITIZE DECISION

TITLE: CREST - XEM CARRIER	REV: B3	DRAWN: J.Ameel	CHECKED: <Checked By>	QUALITY CONTROL: <QC By>	RELEASED: <Released By>	DRAWING NO: 001	SCALE: 1:1	SIZE: B
FILENAME: XEM-CARRIER-B3.sch	SAVED: 1/27/2010	DATED: 20091103	DATED: <Checked Date>	DATED: <QC Date>	DATED: <Release Date>	COMPANY: Univ. of Michigan - Physics	SHEET: 38 OF 48

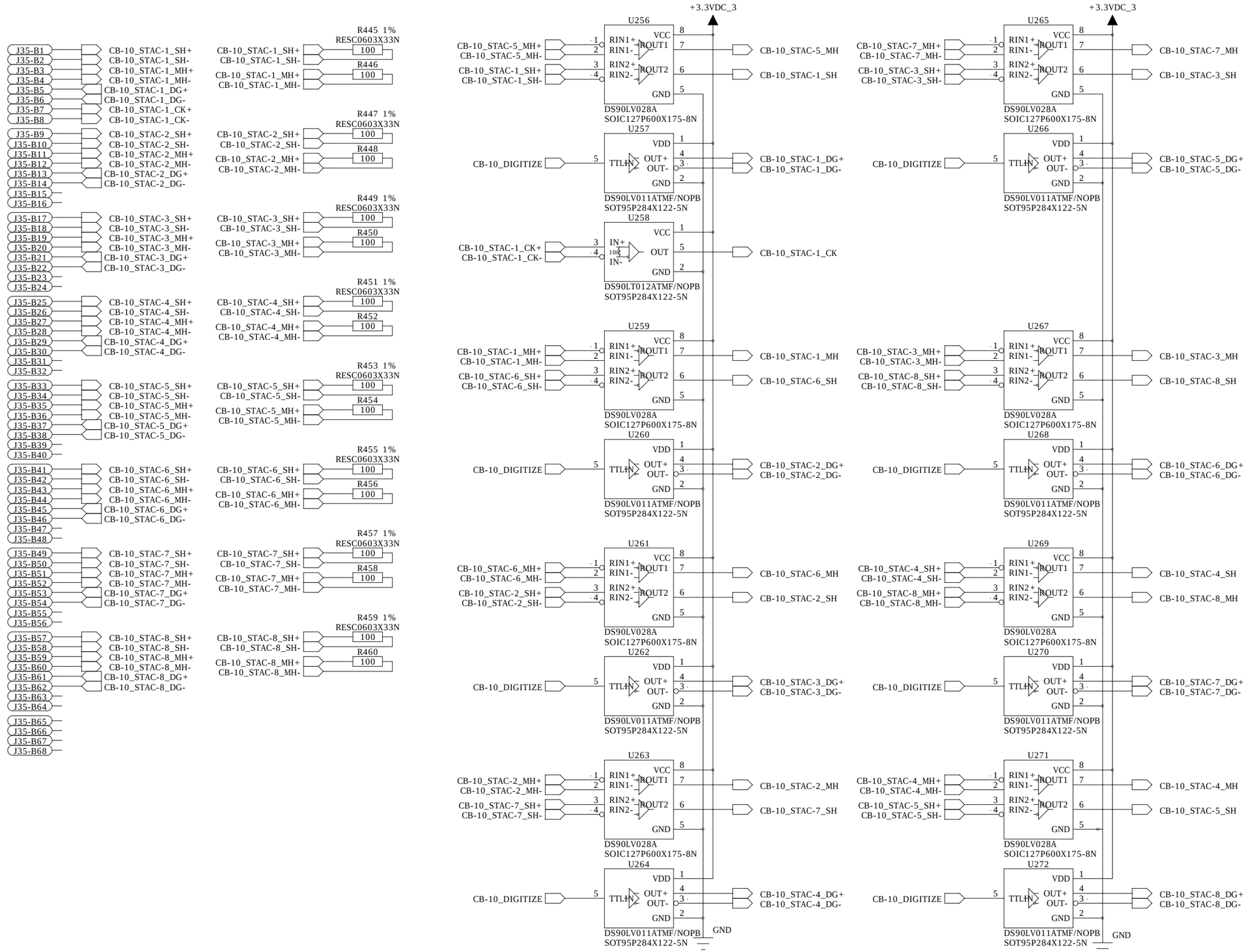

REVISION RECORD			
LTR	ECO NO:	APPROVED:	DATE:

CRESTbus 10

DIGITIZE DECISION

TITLE: CREST - XEM CARRIER	REV: B3	DRAWN: J.Ameel	CHECKED: <Checked By>	QUALITY CONTROL: <QC By>	RELEASED: <Released By>	DRAWING NO: 001	SCALE: 1:1	SIZE: B
FILENAME: XEM-CARRIER-B3.sch	SAVED: 1/27/2010	DATED: 20091103	DATED: <Checked Date>	DATED: <QC Date>	DATED: <Release Date>	COMPANY: Univ. of Michigan - Physics	SHEET: 39 OF 48	

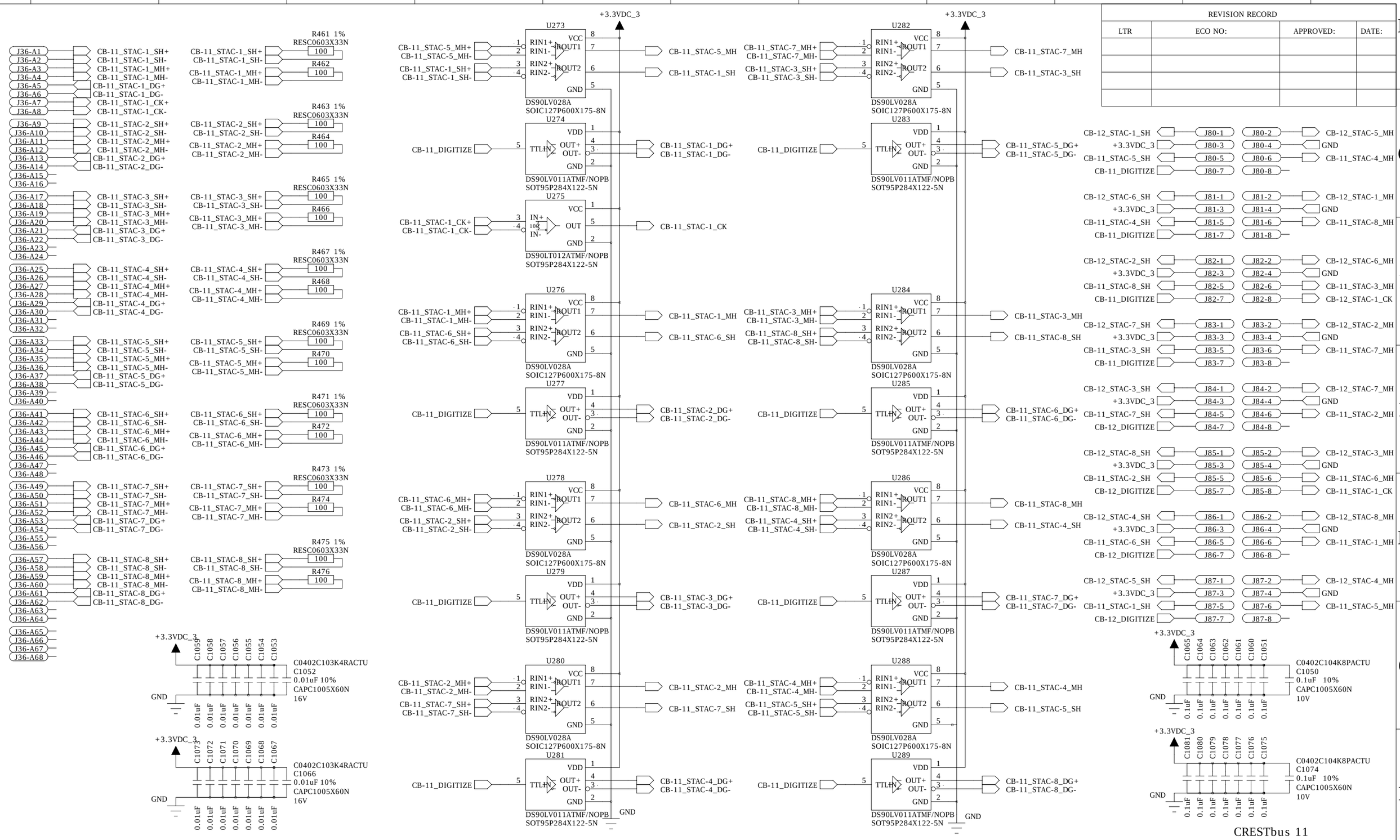

REVISION RECORD			
LTR	ECO NO:	APPROVED:	DATE:

DIGITIZE DECISION

TITLE: CREST - XEM CARRIER	REV: B3	DRAWN: J.Ameel	CHECKED: <Checked By>	QUALITY CONTROL: <QC By>	RELEASED: <Released By>	DRAWING NO: 001	SCALE: 1:1	SIZE: B
FILENAME: XEM-CARRIER-B3.sch	SAVED: 1/27/2010	DATED: 20091103	DATED: <Checked Date>	DATED: <QC Date>	DATED: <Release Date>	COMPANY: Univ. of Michigan - Physics	SHEET: 40 OF 48	

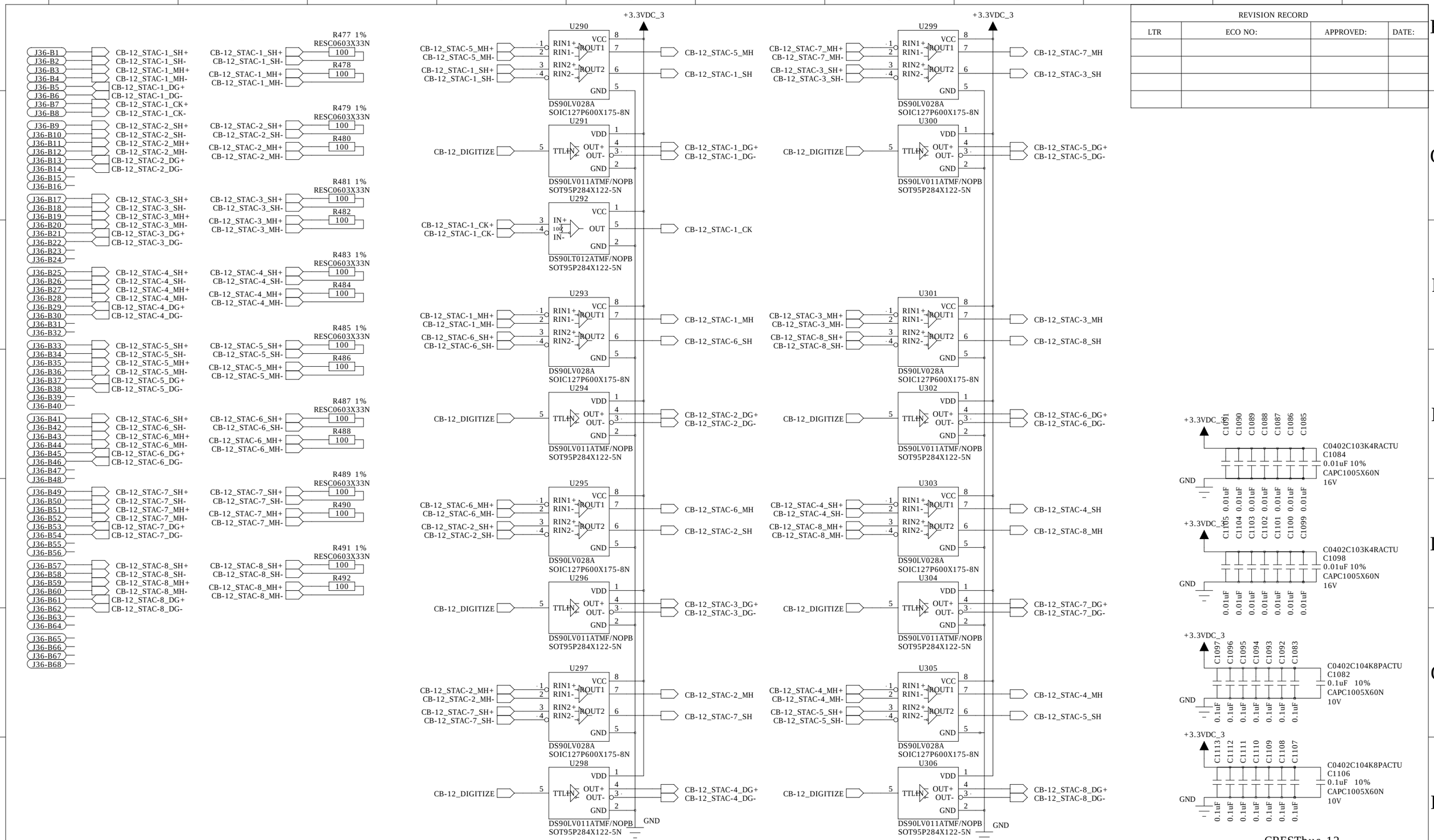

CRESTbus 12

DIGITIZE DECISION

TITLE: CREST - XEM CARRIER	REV: B3	DRAWN: J.Ameel	CHECKED: <Checked By>	QUALITY CONTROL: <QC By>	RELEASED: <Released By>	DRAWING NO: 001	SCALE: 1:1	SIZE: B
FILENAME: XEM-CARRIER-B3.sch	SAVED: 1/27/2010	DATED: 20091103	DATED: <Checked Date>	DATED: <QC Date>	DATED: <Release Date>	COMPANY: Univ. of Michigan - Physics	SHEET: 41 OF 48

REVISION RECORD			
LTR	ECO NO:	APPROVED:	DATE:

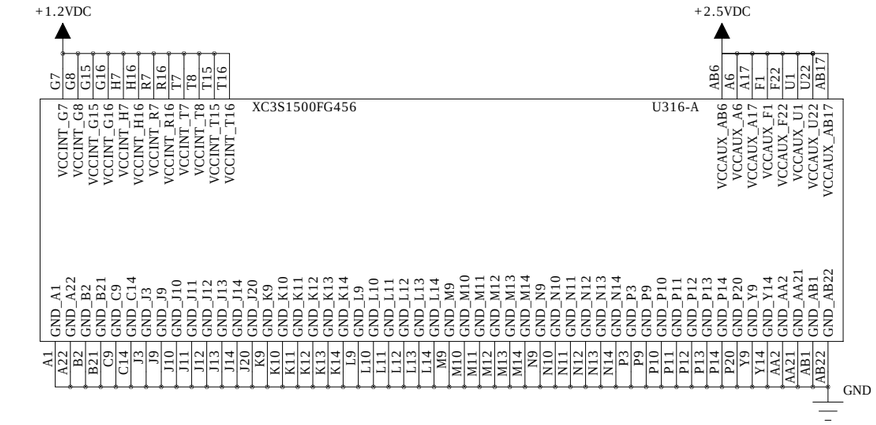

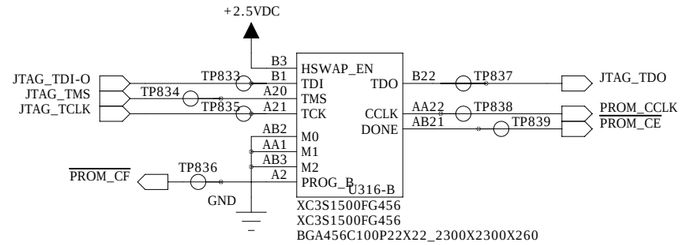

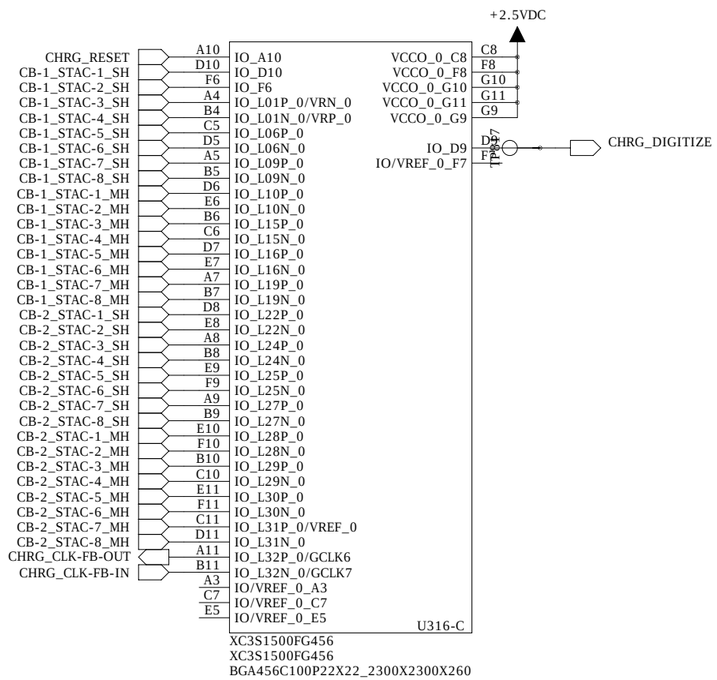

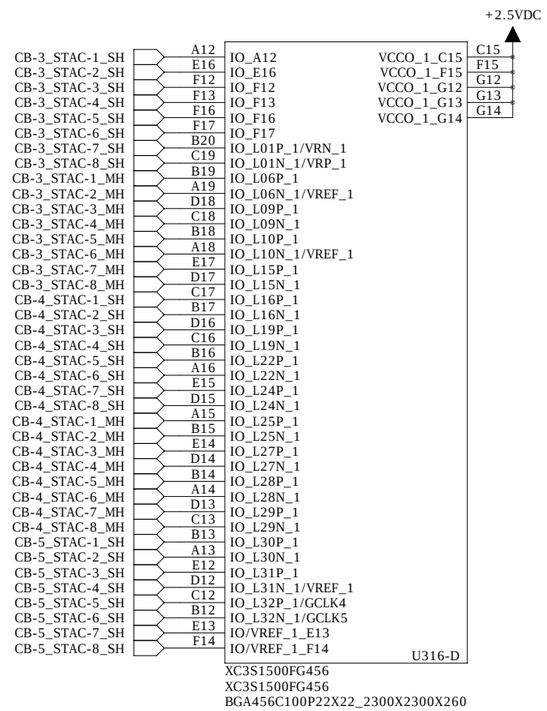

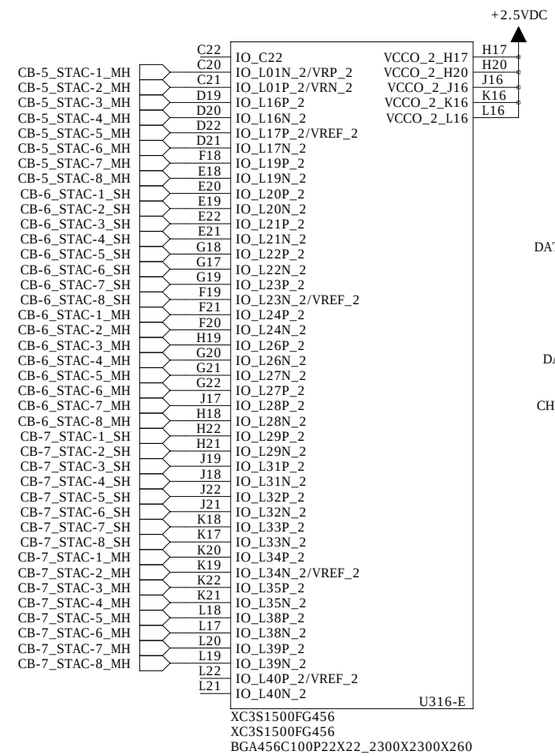

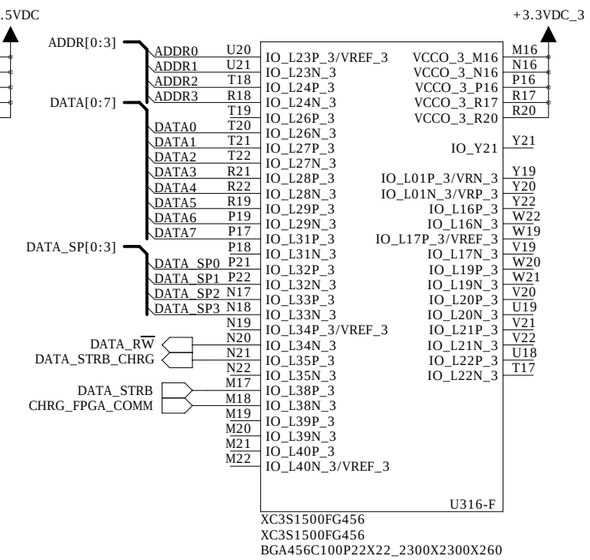

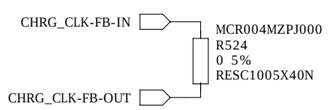

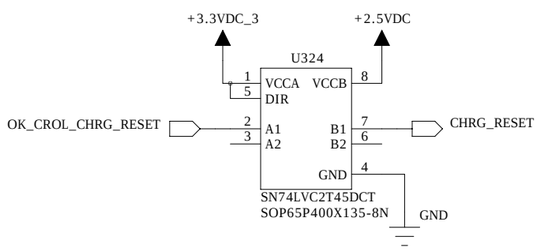

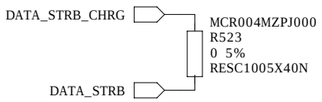

FPGA BANKS 0-3

DIGITIZE DECISION

TITLE: CREST - XEM CARRIER	REV: B3	DRAWN: J.Ameel	CHECKED: <Checked By>	QUALITY CONTROL: <QC By>	RELEASED: <Released By>	DRAWING NO: 001	SCALE: 1:1	SIZE: B
FILENAME: XEM-CARRIER-B3.sch	SAVED: 1/27/2010	DATED: 20091103	DATED: <Checked Date>	DATED: <QC Date>	DATED: <Release Date>	COMPANY: Univ. of Michigan - Physics	SHEET: 42 OF 48	

REVISION RECORD			
LTR	ECO NO:	APPROVED:	DATE:

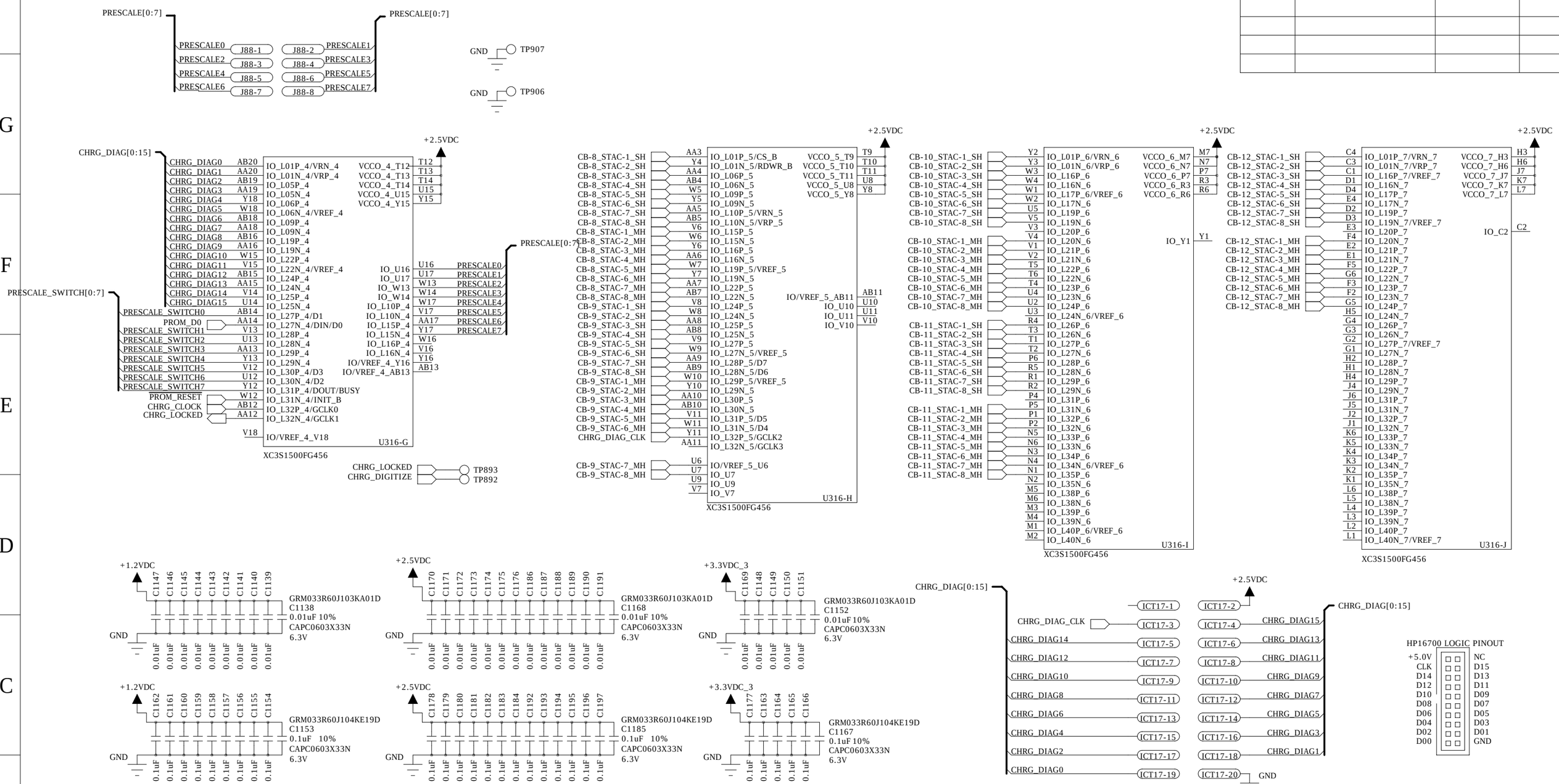

FPGA BANKS 4-7

DIGITIZE DECISION

TITLE: CREST - XEM CARRIER	REV: B3	DRAWN: J.Ameel	CHECKED: <Checked By>	QUALITY CONTROL: <QC By>	RELEASED: <Released By>	DRAWING NO: 001	SCALE: 1:1	SIZE: B
FILENAME: XEM-CARRIER-B3.sch	SAVED: 1/27/2010	DATED: 20091103	DATED: <Checked Date>	DATED: <QC Date>	DATED: <Release Date>	COMPANY: Univ. of Michigan - Physics	SHEET: 43 OF 48	

REVISION RECORD			
LTR	ECO NO:	APPROVED:	DATE:

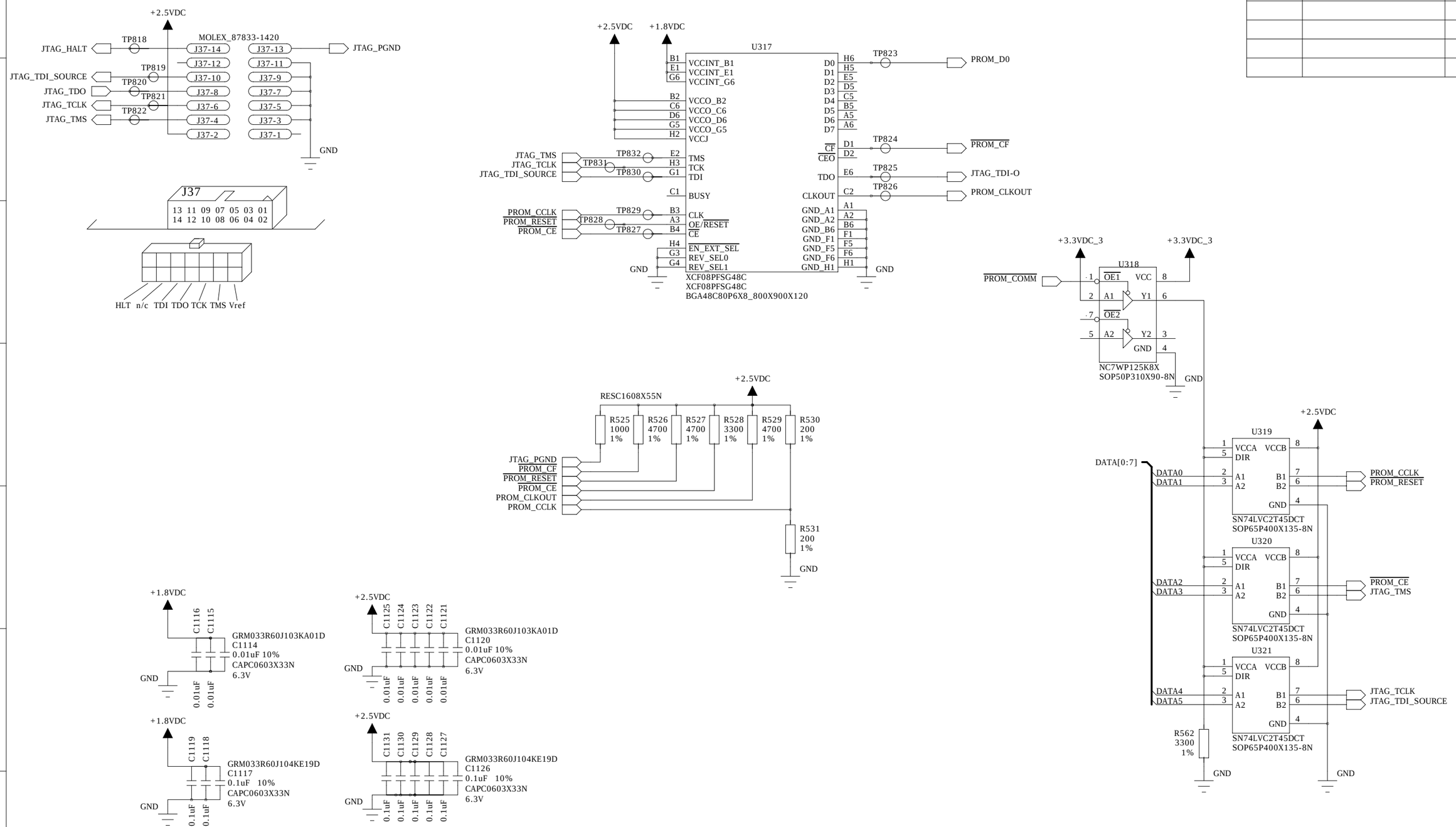

JTAG and PROM

DIGITIZE DECISION

TITLE: CREST - XEM CARRIER	REV: B3	DRAWN: J.Ameel	CHECKED: <Checked By>	QUALITY CONTROL: <QC By>	RELEASED: <Released By>	DRAWING NO: 001	SCALE: 1:1	SIZE: B
FILENAME: XEM-CARRIER-B3.sch	SAVED: 1/27/2010	DATED: 20091103	DATED: <Checked Date>	DATED: <QC Date>	DATED: <Release Date>	COMPANY: Univ. of Michigan - Physics	SHEET: 44 OF 48

REVISION RECORD			
LTR	ECO NO:	APPROVED:	DATE:

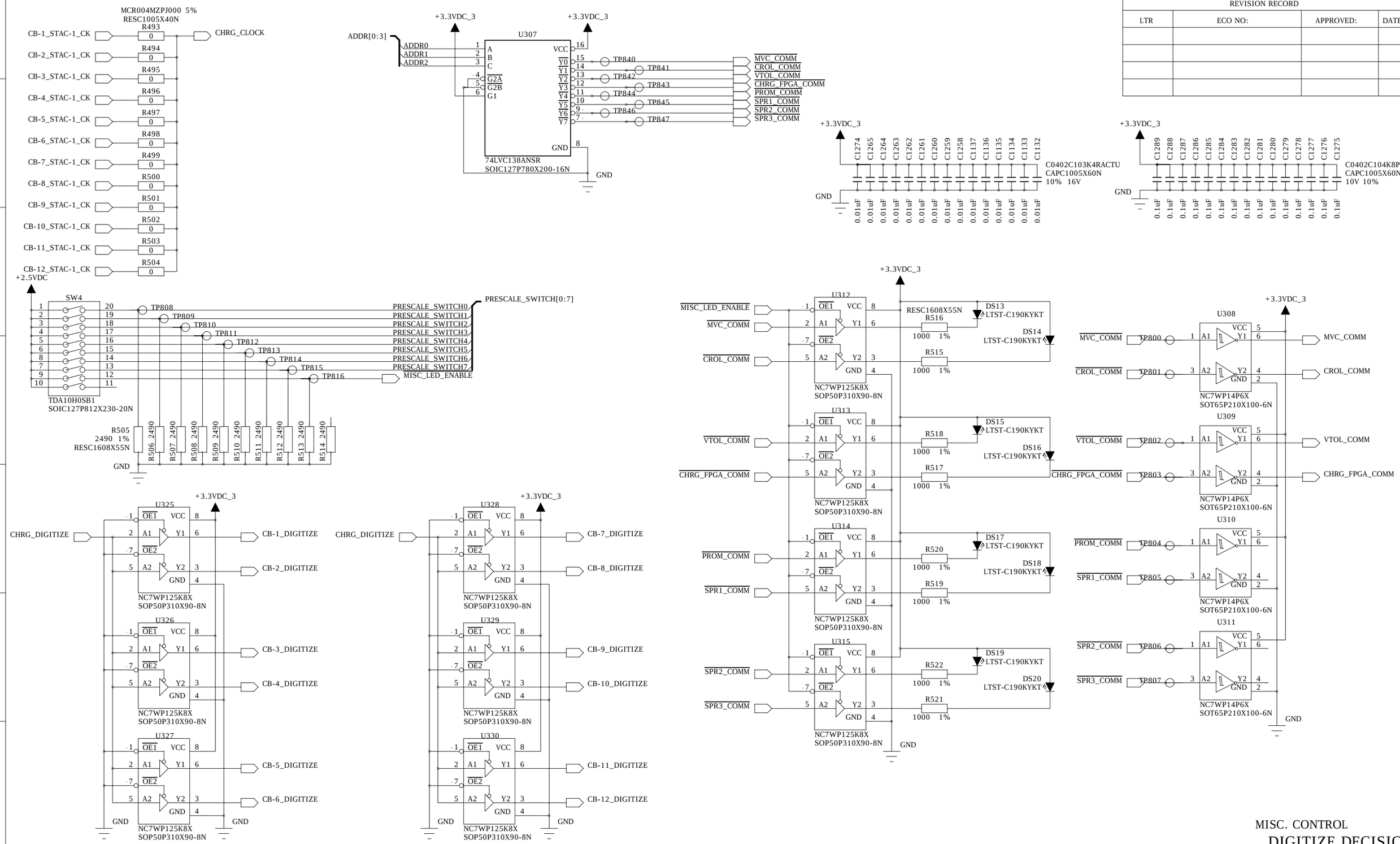

MISC. CONTROL
DIGITIZE DECISION

TITLE: CREST - XEM CARRIER	REV: B3	DRAWN: J.Ameel	CHECKED: <Checked By>	QUALITY CONTROL: <QC By>	RELEASED: <Released By>	DRAWING NO: 001	SCALE: 1:1	SIZE: B
FILENAME: XEM-CARRIER-B3.sch	SAVED: 1/27/2010	DATED: 20091103	DATED: <Checked Date>	DATED: <QC Date>	DATED: <Release Date>	COMPANY: Univ. of Michigan - Physics	SHEET: 45 OF 48

REVISION RECORD			
LTR	ECO NO:	APPROVED:	DATE:

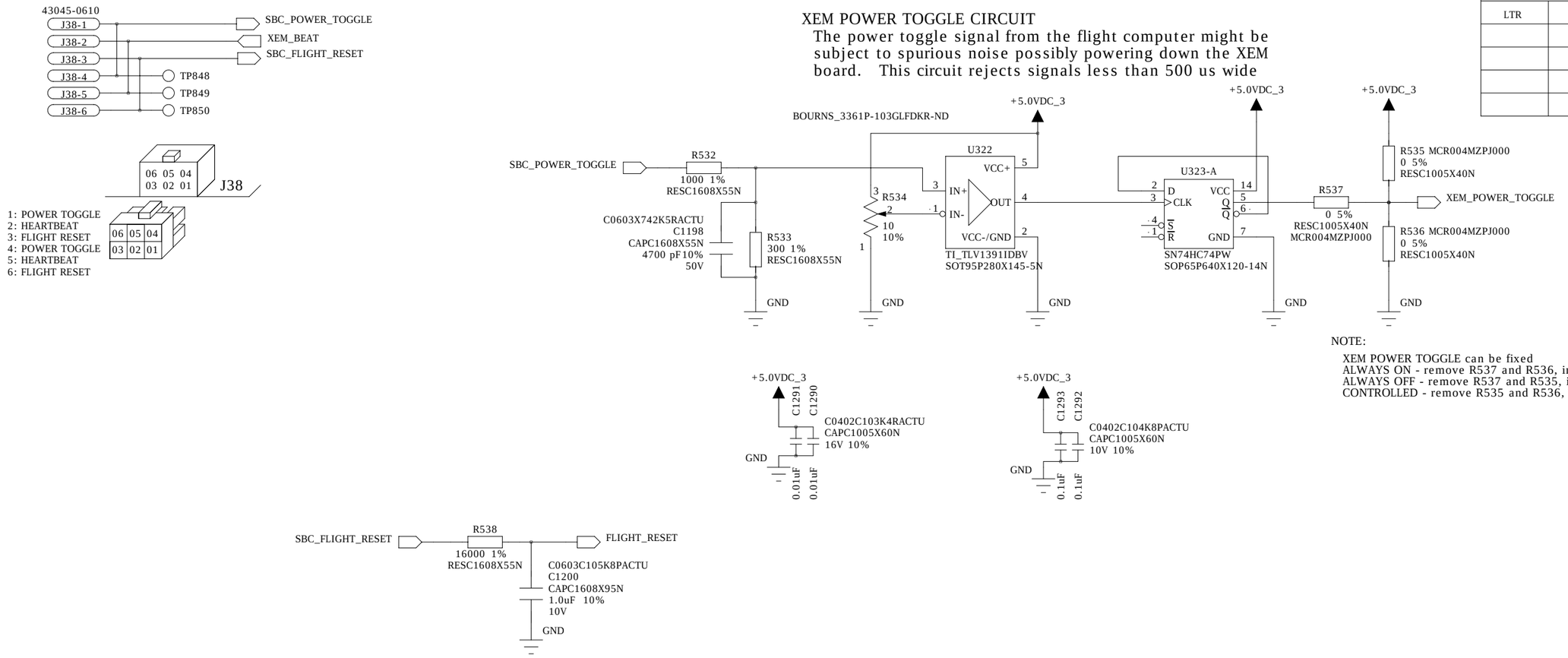

FLIGHT COMPUTER I/O
GLOBAL XEM BOARD

TITLE: CREST - XEM CARRIER	REV: B3	DRAWN: J.Ameel	CHECKED: <Checked By>	QUALITY CONTROL: <QC By>	RELEASED: <Released By>	DRAWING NO: 001	SCALE: 1:1 / SIZE: B
FILENAME: XEM-CARRIER-B3.sch	SAVED: 1/27/2010	DATED: 20091103	DATED: <Checked Date>	DATED: <QC Date>	DATED: <Release Date>	COMPANY: Univ. of Michigan - Physics	SHEET: 46 OF 48

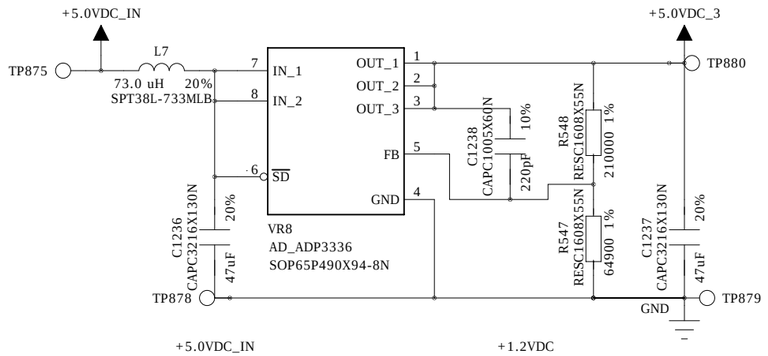

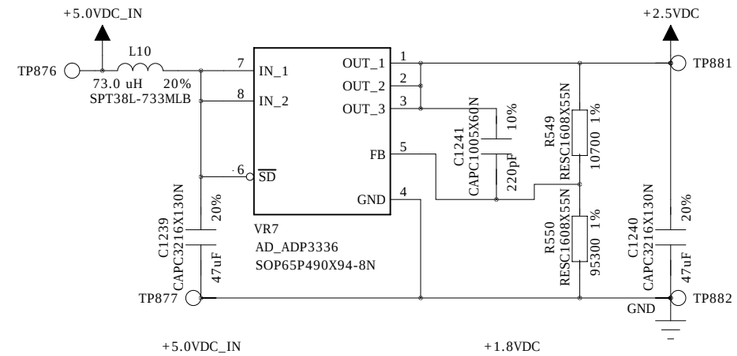

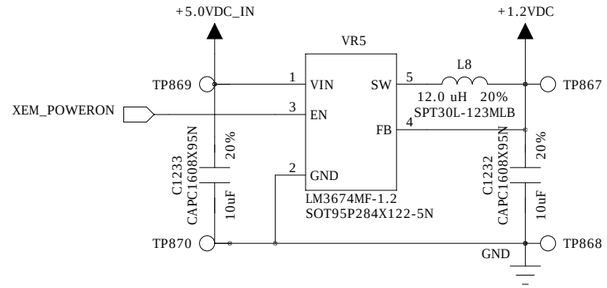

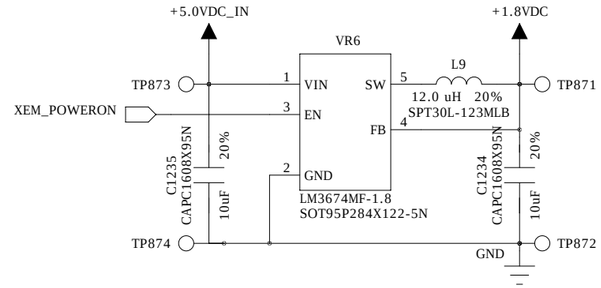

REVISION RECORD			
LTR	ECO NO:	APPROVED:	DATE:

POWER INPUT

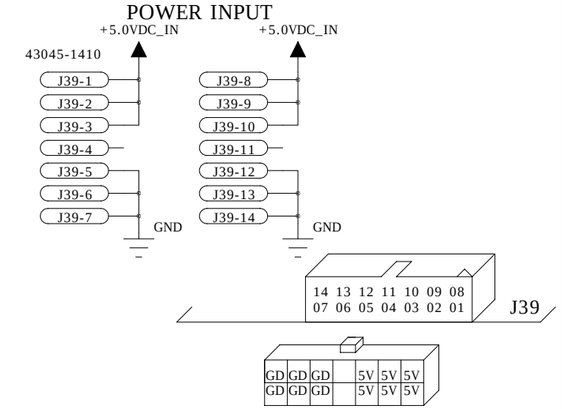

MVC POWER SUPPLY 3.3V, 2.0A

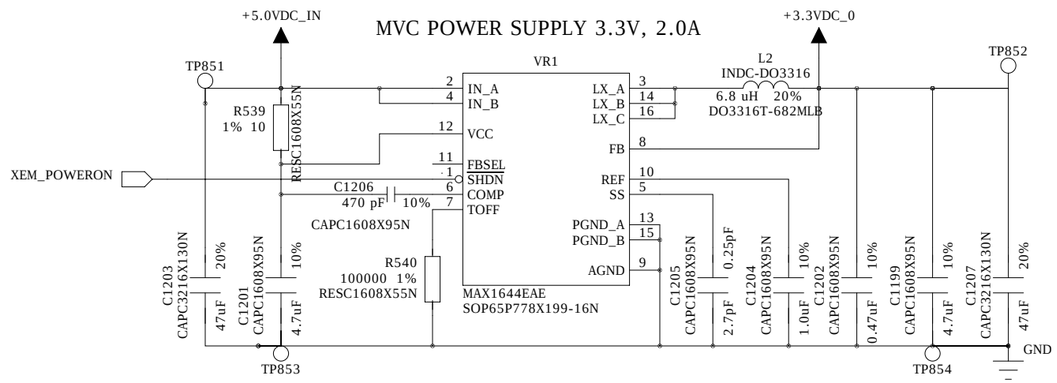

VTOL POWER SUPPLY 3.3V, 2.0A

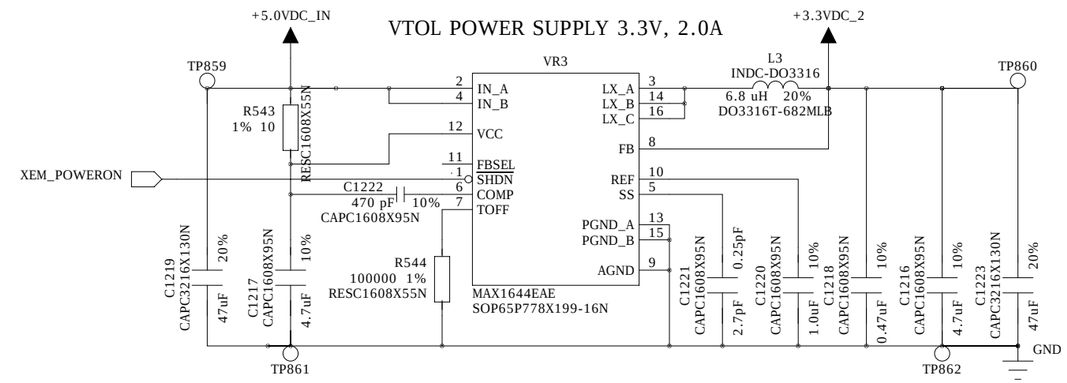

CROL POWER SUPPLY 3.3V, 2.0A

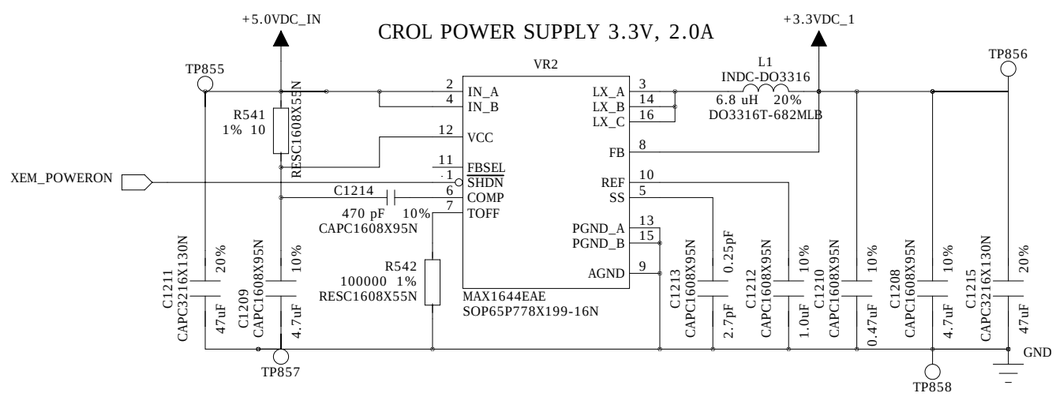

DIGITIZE POWER SUPPLY 3.3V, 2.0A

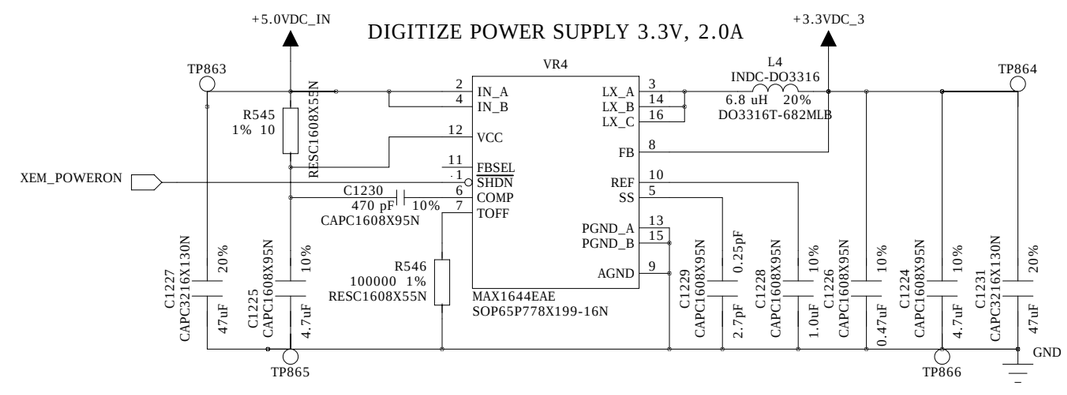

POWER IN, LOW V SUPPLIES

GLOBAL XEM BOARD

TITLE: CREST - XEM CARRIER	REV: B3	DRAWN: J.Ameel	CHECKED: <Checked By>	QUALITY CONTROL: <QC By>	RELEASED: <Released By>	DRAWING NO: 001	SCALE: 1:1	SIZE: B
FILENAME: XEM-CARRIER-B3.sch	SAVED: 1/27/2010	DATED: 20091103	DATED: <Checked Date>	DATED: <QC Date>	DATED: <Release Date>	COMPANY: Univ. of Michigan - Physics	SHEET: 47 OF 48

REVISION RECORD			
LTR	ECO NO:	APPROVED:	DATE:

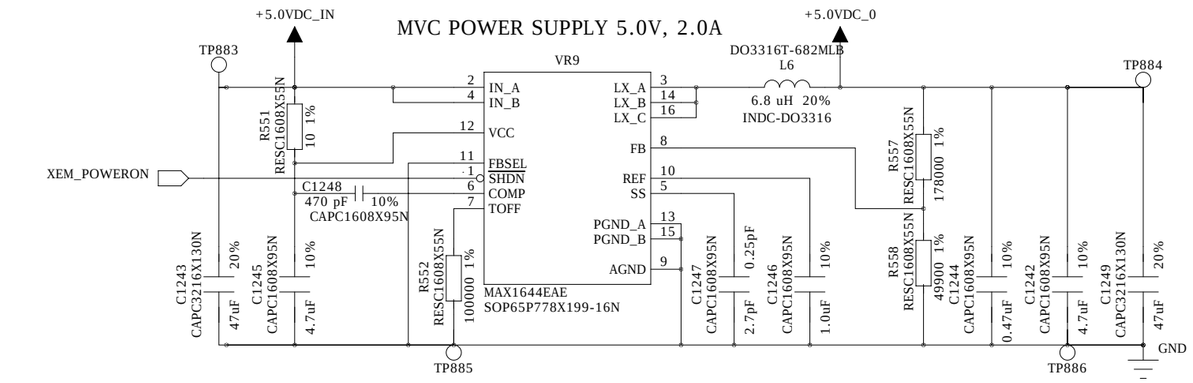

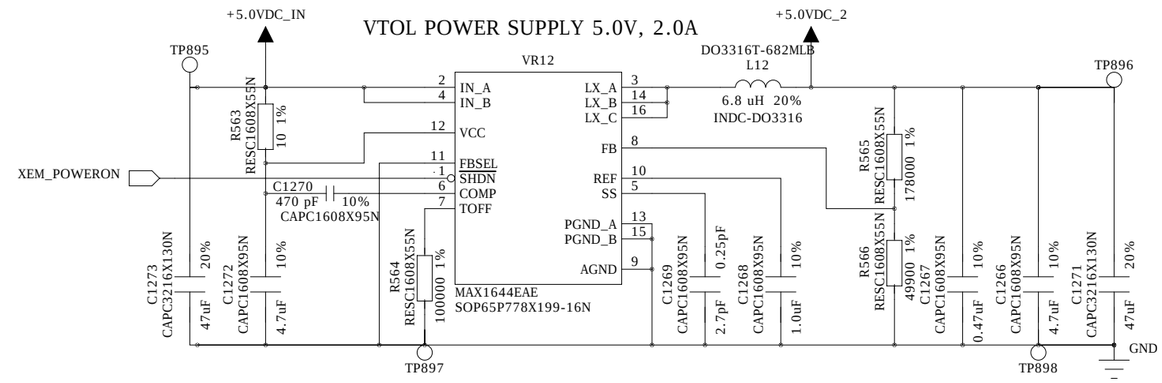

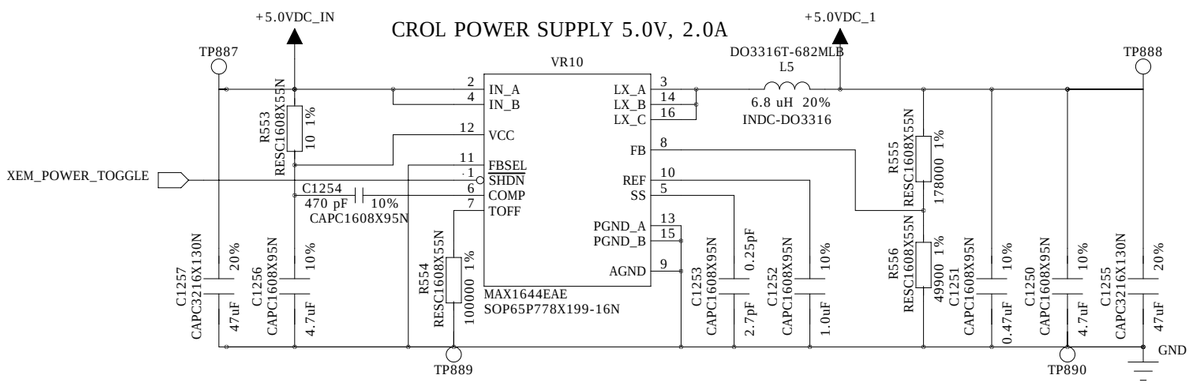

POWER IN, 5.0V SUPPLIES
GLOBAL XEM BOARD

TITLE: CREST - XEM CARRIER	REV: B3	DRAWN: J.Ameel	CHECKED: <Checked By>	QUALITY CONTROL: <QC By>	RELEASED: <Released By>	DRAWING NO: 001	SCALE: 1:1	SIZE: B
FILENAME: XEM-CARRIER-B3.sch	SAVED: 1/27/2010	DATED: 20091103	DATED: <Checked Date>	DATED: <QC Date>	DATED: <Release Date>	COMPANY: Univ. of Michigan - Physics	SHEET: 48 OF 48