February 10, 2000

Study of the Forward Veto System (FVS) for CKM

P.Cooper C. Milsténe

I) Introduction

The Forward Veto System (FVS) is located at the back of the apparatus, just after the Pi-Rich, as described in the proposal [1]. It is one of the three of the γ veto system, used for the background reduction which is critical in the study of the rare decay $K^+ \to \pi^+ \nu\bar{\nu}$. The simulation program Geant was used in this study, and FVS was made with as building block, the sandwich of scintillator/lead used in the VVS. In this way we could benefit from part of the information acquired in the VVS study. The final FVS will be chosen to fit the needs investigated here and might be using different technics.

II) Study of the Forward Veto System FVS

1) FVS Geometry

The FVS counter is located at the back of the Pi-Rich and facing the particles by a surface of 200cmx200cm and a "traditional" depth of 18X0.

A hole of 20x20 cm2 shifted from the FVS center by Dy=-10cm, allows the non-interacting beam to go through after a slight deflection by a magnetic field. This hole defines 4 non-equal quadrants to the FVS, which will be referred as A, B, C and D and are represented in Figure 1

This study follows the Vacuum Veto System (VVS) study. Here too we are building the modules from sandwiches of Scintillator and Lead,

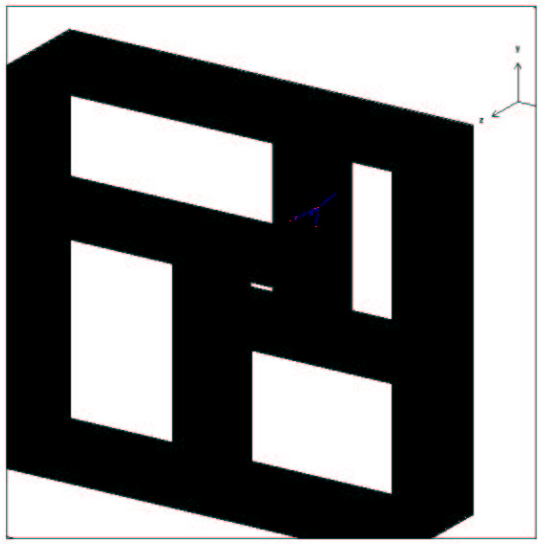

Figure 1: The 4 quadrants of the FVS delimited by the beam hole

Sc(0.5cm)/Pb(0.1cm),for a depth of 18X0(64cm) and this corresponds to $\simeq$101 layers of Pb. Each one of the 4 quadrants A, B, C and D delimited by the hole is located in a separate enclosure with external walls of steel 0.6cm thick, except the wall facing the particle which is made of 0.1cm plastic as well as the internal walls. The plastic of the internal walls constitute the FVS cracks.

A module will be simplified to be a whole quadrant, without extra subdivisions.

2) The Inefficiencies of the Forward Veto System to γ

In order to be realistic in the inefficiencies of the FVS, one should avoid to shower at or around the beam hole, since FVS is not "implicated" in the

detection at the hole. This part is taken over by the Hole Veto System HVS.

We will therefore simulate the beam by sweeping a region of ±30cm in x and y and centered 50cm away from the hole, in one quadrant (A).

The energy cutoff was chosen to be 1MeV for both hadrons and leptons and the Threshold of the detected energy to be 1MeV as well, as in the VVS

Here too we are choosing to study the γ coming from the main background, the decay $K \rightarrow \pi^+\pi^0$; $\pi^0 \rightarrow \gamma\gamma$. This background is particularly dangerous since if undetected the two γ fake the $\nu\bar{\nu}$ of the rare decay $K \rightarrow \pi^+\nu\bar{\nu}$. We have calculated that in order to reject properly the $K^+ \rightarrow \pi^+\pi^0$ background, the π^0 rejection should be 1.6 10^{-7}. As a consequence the required inefficiency performance of the CKM veto systems obtained have been reported in our proposal , in table4 and will be refered to as the SPECS[1]. The FVS however addresses the γ which in the lab, goes in the direction of the π^+ in the decay . This γ tends to be the higher energy γ in the lab. In a separate study [1]it appeared that the FVS deals in 40% of the cases with one of the γ's coming from the decay in flight of the π^0 whereas the VVS deals with the other γ. We will however study the whole energy range considered in our proposal [1] and compare the efficiencies to the SPECS given there.

This study will be done for different angles. The range of angles θ at each energy takes into account the results from a sets of 1 M events simulated with a fast MonteCarlo.[2] However, here, the geometrical acceptance of the apparatus provides a bigger constraint to the angle range. We will take into account the fact that in order to produce the γs of the background under study, a beam decaying in the Fiducial volume, has to have an angle <3deg in order to "make it" to the FVS, otherwise, for a bigger angle it will hit the VVS. Therefore the θ angles of the particles under study at each energy are limited by both the geometry of the apparatus and the kinematics to be θ <3deg in order not to be in the VVS "territory" and θ >0deg not to be in the hole covered by HVS. This leaves a range of θ=[1:2]deg, and the inefficiency is stable and independent of the angle in that small range.

[1]presentation of P. Cooper in a CKM meeting
[2]EXP the Fast MonteCarlo of Peter Cooper

Energy (GeV)	FVS SPECS	Geant FVS γ inefficiency
0.0-0.02	1	1.97 10^{-2}
0.04-0.06	5 10^{-2}	1 10^{-4}
0.1-0.2	2 10^{-3}	$<$ 10^{-4}
0.2-0.4	5 10^{-4}	$<$ 1.0 10^{-4}
0.4-1.0	2 10^{-4}	4 10−5
1.0-3.0	1 10^{-4}	$<$ 1.0 10^{-5}

Table 1: FVS inefficiency for versus the SPEC at various energies for γ.

In Table 1 the inefficiencies obtained by Geant are given in the different energy ranges and compared to the SPEC in that range.

They are represented in Figure **??** as well the solid curve joining the SPEC at each energy.

At energy 1GeV and higher, the inefficiencies of FVS to γs and electrons should be comparable. We will compare the FVS inefficiencies in various energies, for both particle type.

3) Inefficiencies of the Forward Veto System to electrons

In Figure 3 we compare the distributions of detected energies in FVS due to γs and electrons for E_{Thresh}=1MeV.

This is done in 4 energy ranges separately, clockwise,starting at the upper left corner by the 1 GeV particles, and down to 15 MeV particles. In that figure, one can see that the higher the energy and the closer the similarity in the detected energy distribution between the signals left by the γ and the

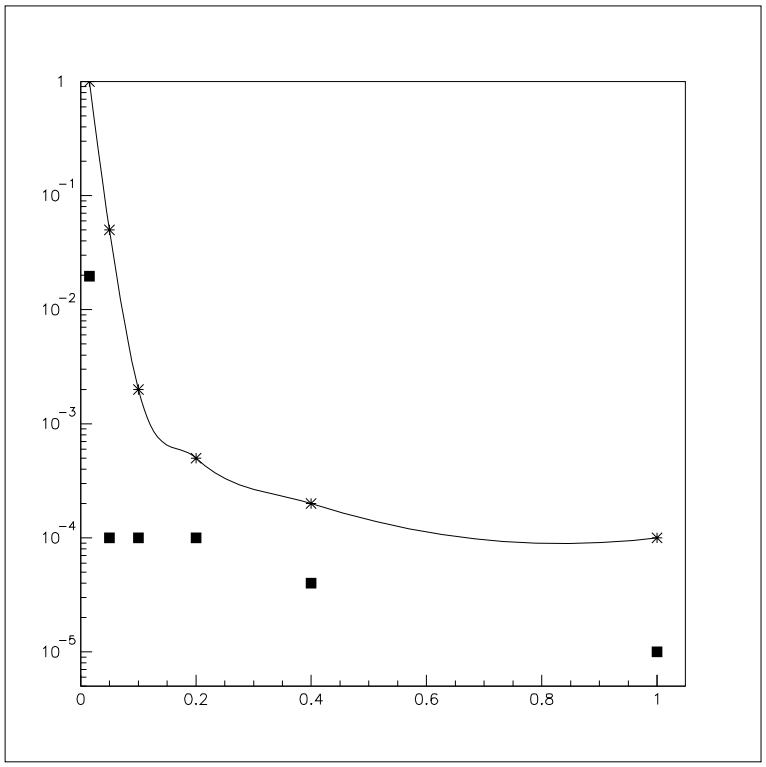

Figure 2: FVS γ Inefficiencies from Geant in various energy ranges and their SPEC in that range.

electron. At 1GeV one barely distinguish between the 2 curves. At lower energy, FVS is more efficient with electrons than with $/gamma$s.

III) Inefficiencies of a FVS preceded by the Pion-Rich

The Pi-Rich is located between the Vacuum Veto System and the Forward Veto System. The question being does the material of the pion Rich affects the Forward Veto System efficiency since the particles coming from the fiducial volume out of VVS might interact in their way to the FVS. Geant shows that in the Pion-Rich most of the interactions occur in the mirror, as can be seen in Figure 4.

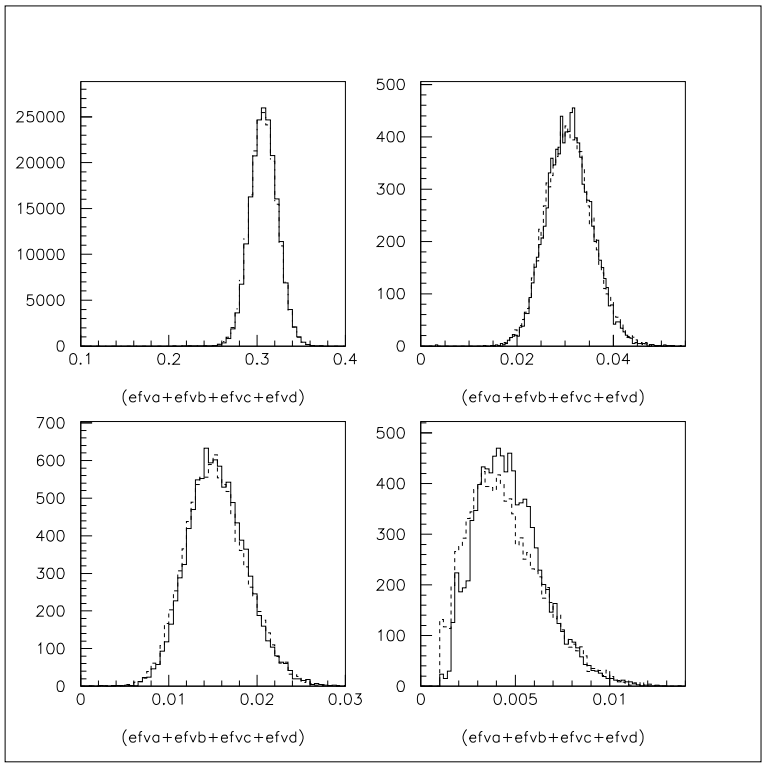

Figure 3: The detected energy in FVS for electrons and γ of 1GeV, upper left corner and clockwise decreasing in energy 100MeV, 50 MeV and 15MeV. The similarity of the FVS signal for electrons(full lines) and γ (doted lines) improving with increasing energies.

The mirror, by its location behaves somewhat like an extension of FVS. Therefore one would not expect it to cause of an important decrease in efficiency. This will be checked carefully using Geant in all the energy ranges. To simplify this study, we "create" an FVS without beam hole, with a 200x200cm2 surface facing the particles and located behind the Pion-Rich. The Pion-Rich is a 20m long device filled with neon which has a mirror of radius 90cm and is 1.0cm thick. This mirror is centered 10cm before the exit window of Rich. The Forward Veto System entrance, here, is located 40cm away from the Pion-Rich exit . Photons of 1GeV energy and a θ angle limited by the geometry of the apparatus to the range [1-2]degrees are swept through 40x40cm2 of the Pion-Rich entry centered a x=y=0cm. A set of

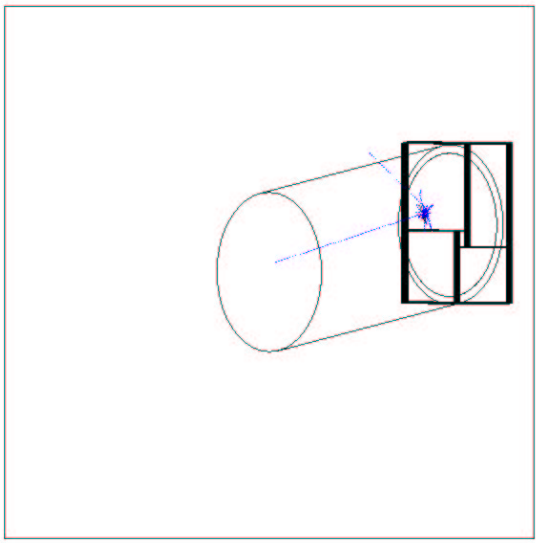

Figure 4: A typical γ interaction in the Pion-Rich mirror prior to detection in FVS

100000, 1GeV γ are produced at various energies and 1deg angle. This study was made for different thickness of the mirror are reported in the Table 2. The thickness studied where 2cm, 5cm and 10cm, taking into account that even if the mirror itself is not 10cm thick, there is a mirror support of metal and a screw, therefore we express that fact in increasing the thickness of the mirror itself.

In all the cases, above 200MeV, no events were undetected by the FVS, the efficiency being better than the SPEC, everywhere and even with a 10cm thick mirror. We represent in Figure 5 the inefficiency as a function of energy as obtained from Table 2 At 400MeV and above, for all the thicknesses of Pi-Rich mirror, we represent only one point which is the inefficiency limit,

Energy (GeV)	FVS SPECS	Pi-Rich mirror thickness in cm	Geant FVS γ inefficiency
0.0-0.02	1	no Pi-Rich (0cm)	$1.97\ 10^{-2}$
		2cm	$6.31\ 10^{-2}$
		5cm	$1.5\ 10^{-1}$
		10cm	$2.84\ 10^{-1}$
0.04-0.06	$5\ 10^{-2}$	no Pi-Rich (0cm)	$1\ 10^{-4}$
		2cm	$2.4\ 10^{-3}$
		5cm	$9.2\ 10^{-3}$
		10cm	$7.8\ 10^{-2}$
0.1-0.2	$2\ 10^{-3}$	no Pi-Rich (0cm)	$< 1.0\ 10^{-4}$
		2cm	$4.0\ 10^{-4}$
		5cm	$5.0\ 10^{-4}$
		10cm	$2.7\ 10^{-3}$
0.2-0.4	$5\ 10^{-4}$	no Pi-Rich (0cm)	$< 10^{-4}$
		2cm	$< 10^{-4}$
		5cm	$< 10^{-4}$
		10cm	$< 10^{-4}$
0.4-1.0	$2\ 10^{-4}$	no Pi-Rich (0cm)	4 10−5
		2cm	$< 10^{-4}$
		5cm	$< 10^{-4}$
		10cm	$< 10^{-4}$
1.0-3.0	$1\ 10^{-4}$	no Pi-Rich (0cm)	$< 1.0\ 10^{-5}$
		2cm	$< 2.\ 10^{-5}$
		5cm	$< 2.\ 10^{-5}$
		10cm	$< 2.\ 10^{-5}$

Table 2: FVS inefficiency as a function of the energy of the incoming γ, when FVS is located behind the "material" of a Neon Pi-Rich with a mirror. We have varied the mirror thickness and checked the corresponding inefficiencies.

the efficiency is even better and the actual inefficiency lower.

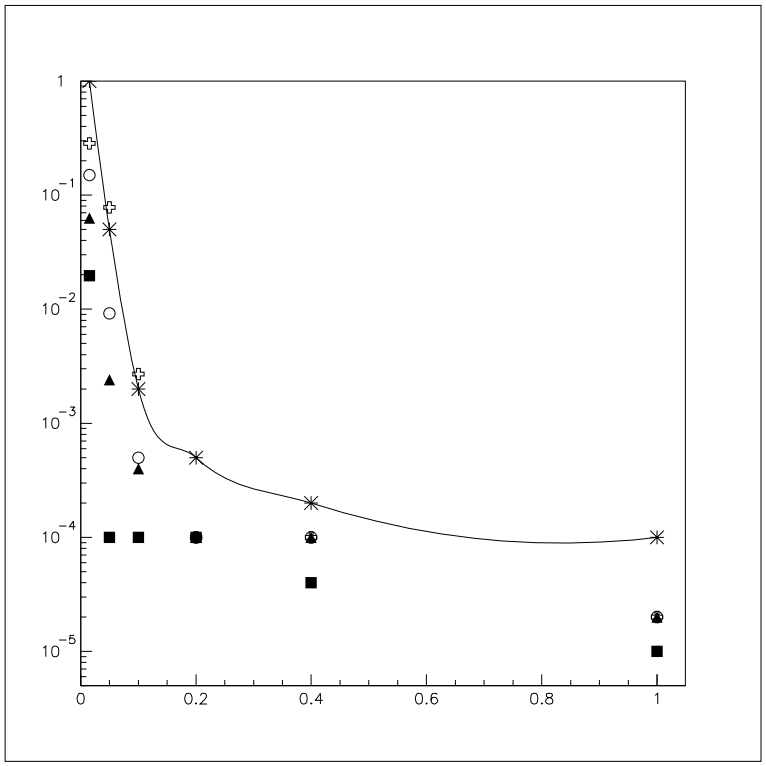

Figure 5: The inefficiencies in various energy ranges. The Stars represent the SPEC, the Full Squares the inefficiencies of FVS alone, the Triangles, Circles and Crosses corresponds FVS located behind a neon Rich with a "mirror" 2cm,5cm and 10cm thick respectively. At and above 400MeV the inefficiency being well below the line of the SPEC, we report only an inefficiency limit for the 3 mirror thickness checked.

V)Conclusion

We have studied the inefficiency of the Forward Veto System. We have used mostly γs at various energy in angular ranges dictated at each energy by the kinematics of the background $K \to \pi^+\pi^0$ with $\pi^0 \to \gamma\gamma$, (Br=21$\geq$12GeV (by Pi-Rich). We have requested the vertex to be in the decay volume, which in

FVS implies angles is <3deg. The fact that the FVS is located behind the Pi-Rich and that the particle which comes out from the Vacuum Veto System might undergo an interaction there was investigated without increasing the inefficiency above the limits required in [1]. It is at the low energy end that the material before FVS matters the most, as could be expected, however particles produced in the fiducial volume and reaching out from VVS are more likely to have higher energy. Our results have been very encouraging as far as simulations are concerned. In all the study we have considered one type of background, the principal one, we have now to check our results against "reality" using a prototype and a real beam which will include other backgrounds. We will have also to investigate other technics of detections which might be more appropriate for a Forward Veto System.

List of Tables

1 FVS inefficiency for versus the SPEC at various energies for γ. 4

2 FVS inefficiency as a function of the energy of the incoming γ, when FVS is located behind the "material" of a Neon Pi-Rich with a mirror. We have varied the mirror thickness and checked the corresponding inefficiencies. 8

List of Figures

1 The 4 quadrants of the FVS delimited by the beam hole . . . 2

2 FVS γ Inefficiencies from Geant in various energy ranges and their SPEC in that range. 5

3 The detected energy in FVS for electrons and γ of 1GeV, upper left corner and clockwise decreasing in energy 100MeV, 50 MeV and 15MeV. The similarity of the FVS signal for electrons(full lines) and γ (doted lines) improving with increasing energies. 6

4 A typical γ interaction in the Pion-Rich mirror prior to detection in FVS 7

5 The inefficiencies in various energy ranges. The Stars represent the SPEC, the Full Squares the inefficiencies of FVS alone, the Triangles, Circles and Crosses corresponds FVS located behind a neon Rich with a "mirror" 2cm,5cm and 10cm thick respectively. At and above 400MeV the inefficiency being well below the line of the SPEC, we report only an inefficiency limit for the 3 mirror thickness checked. 9

References

[1] FNAL Proposal, Charged Kaon at the Main Injector,April 15,98.