REV	DESCRIPTION	DRAWN	DATE
		APPROVED	DATE

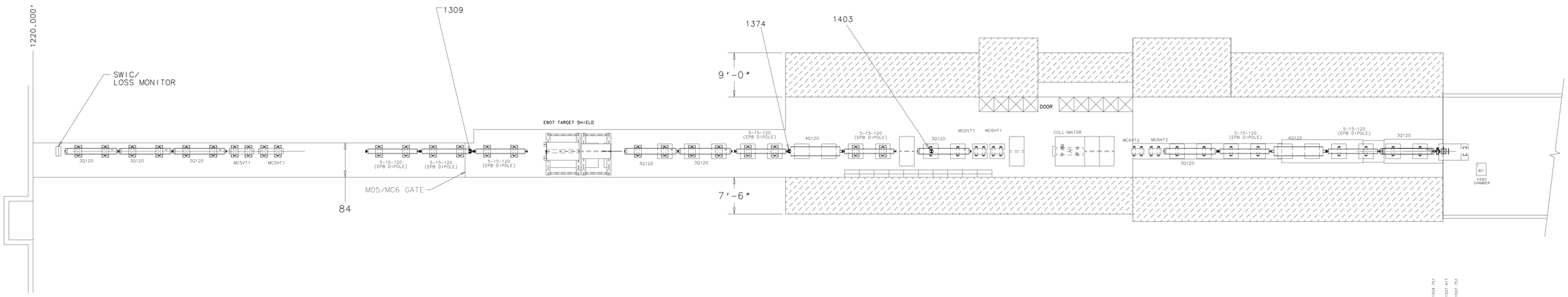

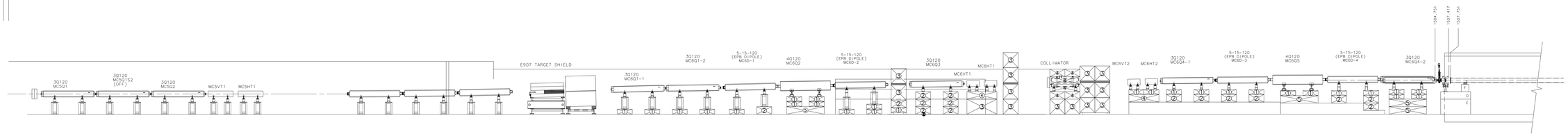

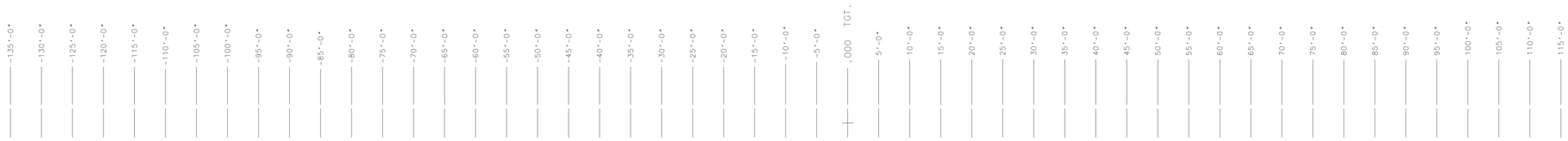

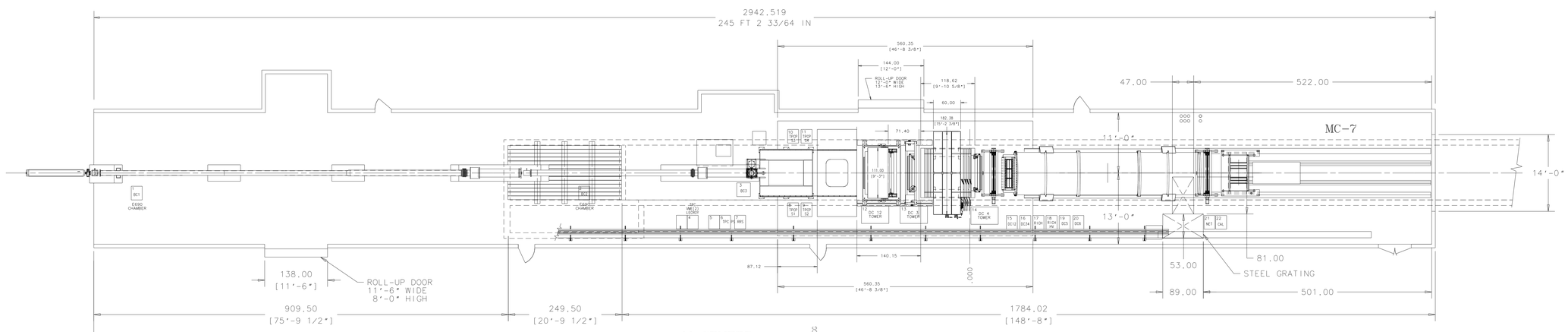

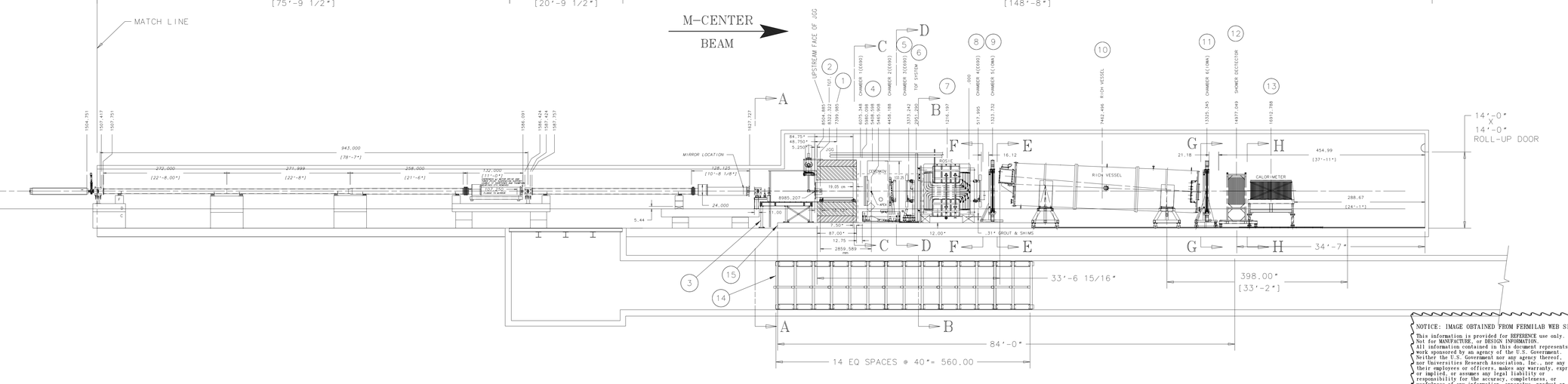

ITEM	PART NO.	DESCRIPTION OR SIZE	QTY.
21			
20			
18			
17			
16			
15	9200.001 MD-397567	JGG CONCRETE PAD	1
14	9200.001 ME-397580	M-BOTTOM STRUCTURAL BRACING LOCATION LAYOUT	1
13	3907.500 ME-397777	CALORIMETER ASSY	1
12	3907.513 ME-421155	ELECTRO MAGNETIC SHOWER DECTOR	1
11	3907.512 ME-421079	DRIFT CHAMBER 6 (IOWA)	1
10	9200.001 ME-397615	RICH DETECTOR STAND ASSY	1
9	3907.512 ME-421082	DRIFT CHAMBER# 5 (IOWA)	1
8	3907.512 ME-421111	DRIFT CHAMBER# 4 (E690)	1
7	3907.540 ME-421025	ROSIE MAGNET	1
6		TOF SYSTEM	1
5	3907.512 ME-421104	E907 DRIFT CHAMBER 3 (E690)	1
4	3907.500 ME-421016	E907 CERENKOV CHAMBER#1(690)-CHAMBER #2(690)	1
3	3907.590 ME-421104	E-907 TCP-CART-STAND-JGG	1
2		TARGET	1
1	ME-397657	JOLLY GREEN GIANT MAGNET	1

PARTS LIST

UNLESS OTHERWISE SPECIFIED			ORIGINATOR	J.KILMER	09-JUL-2001
.XX	.XXX	ANGLES	DRAWN	G.SMITH	06-JAN-2003
± ---	± ---	± ---	CHECKED	-----	18-OCT-2005
1. BREAK ALL SHARP EDGES .015 MAX.			APPROVED	-----	18-OCT-2005
2. DO NOT SCALE DRAWING.			USED ON	E907 BEAMLINE	
3. DIMENSIONS BASED UPON ANSI Y14.5M-1982					
4. MAX. ALL MACH. SURFACES			MATERIAL		

FERMI NATIONAL ACCELERATOR LABORATORY
UNITED STATES DEPARTMENT OF ENERGY

PPD/MECHANICAL DEPT.
E907 M-CENTER BEAMLINE
EQUIPMENT LAYOUT

SCALE	DRAWING NUMBER	SHEET	REV
1:16 & & NOTED	3907.500-ME-397568	1 OF 3	

CREATED WITH : Ideas11NXSeries | GROUP: PPD/MECHANICAL DEPARTMENT

NOTICE: IMAGE OBTAINED FROM FERMILAB WEB SITE
This information is provided for REFERENCE use only. Not for MANUFACTURE, or DESIGN INFORMATION. All information contained in this document represents work sponsored by an agency of the U.S. Government. Neither the U.S. Government nor any agency thereof, nor Universities Research Association, Inc., nor any of their employees or officers, makes any warranty, express or implied, or assumes any legal liability or responsibility for the accuracy, completeness, or usefulness of any information, apparatus, product or process disclosed, or represents that its use would not infringe privately owned rights.