REV	DESCRIPTION	DRAWN	DATE
		APPROVED	DATE

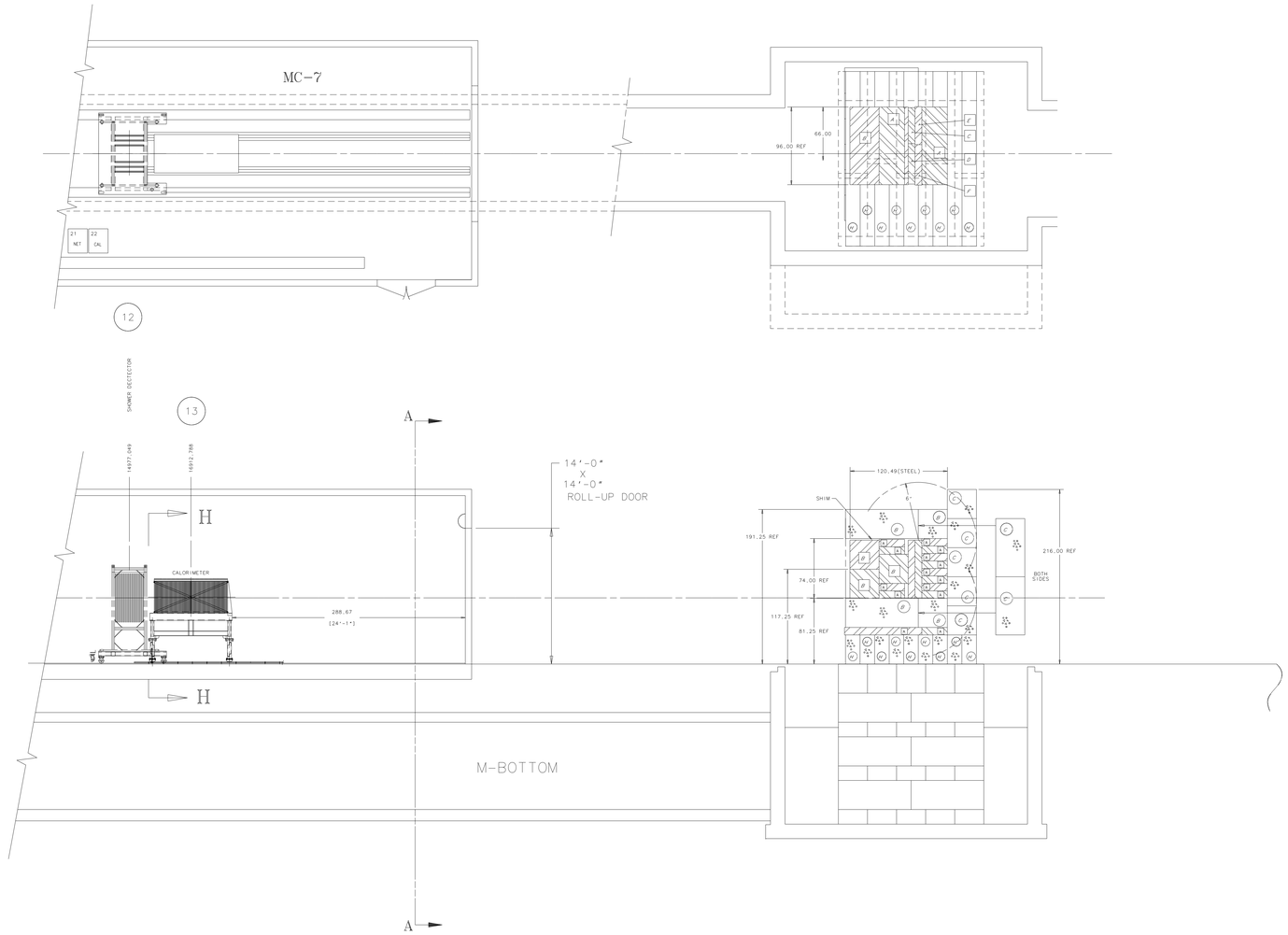

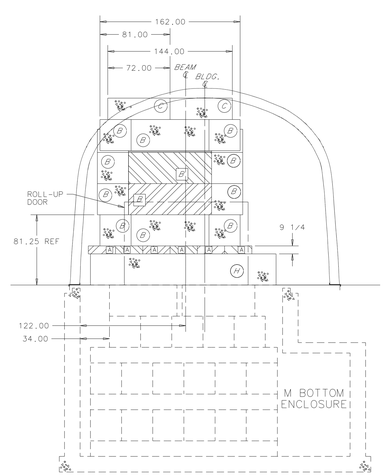

SECTION A-A
SCALE: 1/8

ITEM	PART NO.	DESCRIPTION OR SIZE	QTY.

PARTS LIST

UNLESS OTHERWISE SPECIFIED					
.XX	.XXX	ANGLES	ORIGINATOR	J.KILMER	25-JUN-2003
± ---	± ---	± ---	DRAWN	G.SMITH	25-JUN-2003
			CHECKED	-----	18-OCT-2005
1. BREAK ALL SHARP EDGES .015 MAX.			APPROVED	-----	18-OCT-2005
2. DO NOT SCALE DRAWING.			USED ON	E907 BEAMLINE	
3. DIMENSIONS BASED UPON ANSI Y14.5M-1982					
4. MAX. ALL MACH. SURFACES			MATERIAL		

FERMI NATIONAL ACCELERATOR LABORATORY
UNITED STATES DEPARTMENT OF ENERGY

PPD/MECHANICAL DEPT.
E907 M-CENTER BEAMLINE
EQUIPMENT LAYOUT

SCALE	DRAWING NUMBER	SHEET	REV
1:8	3907.500-ME-397568	3 OF 3	

CREATED WITH : Ideas11NXSeries GROUP: PPD/MECHANICAL DEPARTMENT

NOTICE: IMAGE OBTAINED FROM FERMILAB WEB SITE
This information is provided for REFERENCE use only.
Not for MANUFACTURE, or DESIGN INFORMATION.
All information contained in this document represents work sponsored by an agency of the U.S. Government.
Neither the U.S. Government nor any agency thereof, nor Universities Research Association, Inc., nor any of their employees or officers, makes any warranty, express or implied, or assumes any legal liability or responsibility for the accuracy, completeness, or usefulness of any information, apparatus, product or process disclosed, or represents that its use would not infringe privately owned rights.