REV	DESCRIPTION	DRAWN	DATE
		APPROVED	DATE

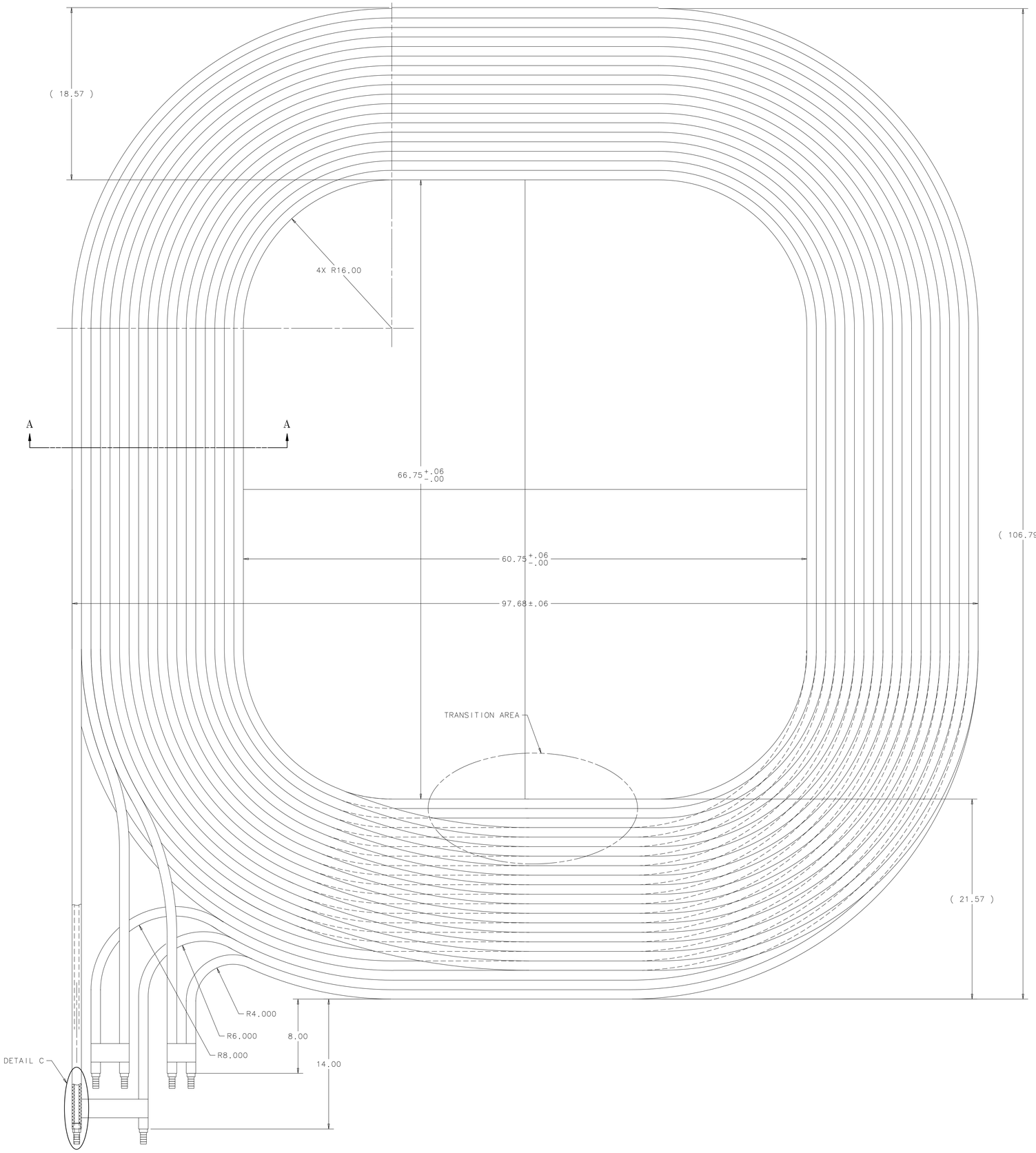

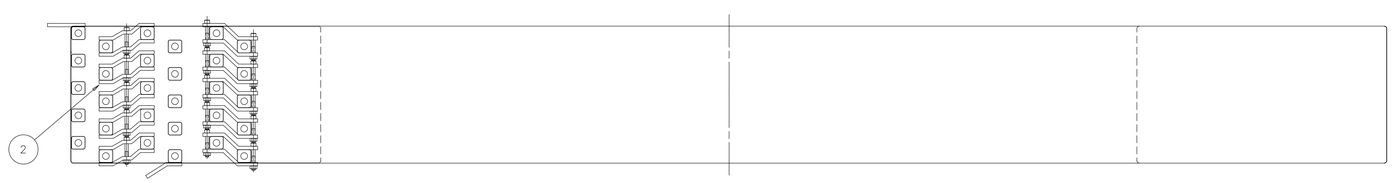

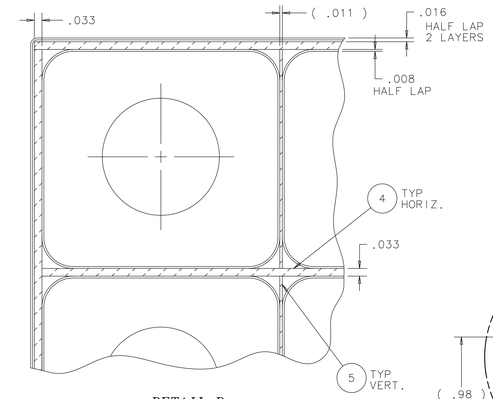

DETAIL D
SCALE: 2:1

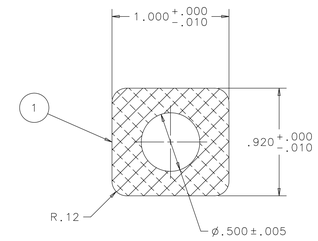

CONDUCTOR CROSS SECTION
SCALE: 2:1

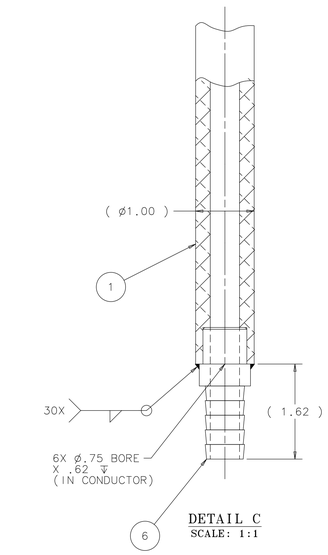

DETAIL C
SCALE: 1:1

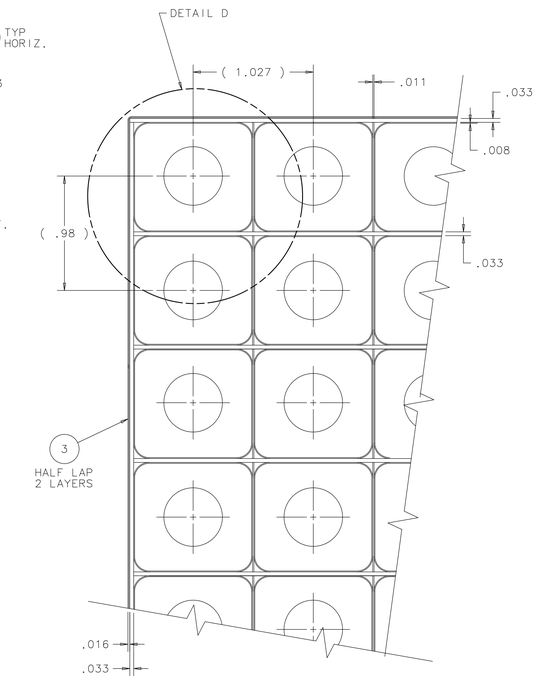

DETAIL B
SCALE: 2:1

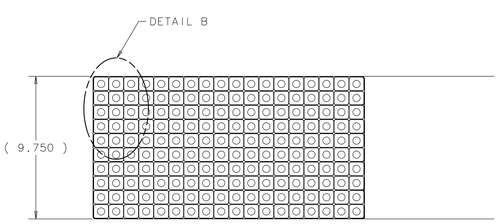

SECTION A-A

NOTES:

1. COIL 10 LAYERS, 18 TURNS = 180 TOTAL TURNS.
2. EACH LAYER HAS 3 INLET WATER PATHS AND 3 OUTLET WATER PATHS.
3. FINAL TAPING NOT SHOWN IN TOP VIEW FOR CLARITY.
4. FILE WELD FLUSH ALL ROUND, DO NOT BURN THROUGH.
5. THE FERRULE IS SLIGHTLY UNDERSIZE TO ALLOW FOR EXPANSION DURING WELDING.

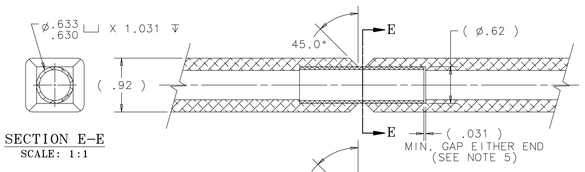

SECTION E-E
SCALE: 1:1

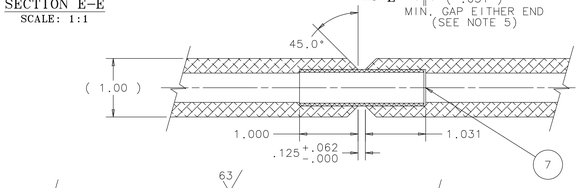

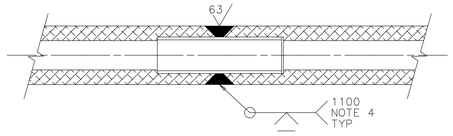

WELD JOINT DETAIL
SCALE: 1:1

WEIGHT = 3,557 LBS.

ITEM	PART NO.	DESCRIPTION OR SIZE	QTY.
7	COML	FERRULE- STAINLESS STEEL TUBING 5/8 O.D. X .049 WALL X 2.12 LG.	1
6	MB-431263	BARBED HOSE WATER CONNECTION	30
5	COML	SCOTCH PLY .011" THK.	AS REQD
4	COML	SCOTCH PLY .033" THK.	AS REQD
3	COML	B-STAGE POLYESTER/GLASS TAPE 2" WIDE X .004 THK.	AS REQD
2	MB-421262	ALUMINUM BUS BAR	14
1	COML	ALUMINUM CONDUCTOR 1.00" X .920"	AS REQD

PARTS LIST

UNLESS OTHERWISE SPECIFIED			ORIGINATOR	J.KILMER	23-MAY-2006
.XX	.XXX	ANGLES	DRAWN	G.SMITH	23-MAY-2006
± .06	± ---	± ---	CHECKED	C.GROZIS	23-MAR-2007
			APPROVED	J.KILMER	23-MAR-2007
			USED ON	---	
			MATERIAL	SEE PARTS LIST ABOVE	

1. BREAK ALL SHARP EDGES .015 MAX.
2. DO NOT SCALE DRAWING.
3. DIMENSIONS BASED UPON ASME Y14.5M-1994
4. MAX. ALL MACH. SURFACES 63 √
5. DRAWING UNITS: U.S. INCH

FERMI NATIONAL ACCELERATOR LABORATORY
UNITED STATES DEPARTMENT OF ENERGY

E907/MAGNETS
JOLLY GREEN GIANT
COIL WINDING (5) PASSES

SCALE	DRAWING NUMBER	SHEET	REV
1:4 AS NOTED	3907.530-ME-421261	1 OF 1	

CREATED WITH : Ideas12NXSeries GROUP: PPD/MECHANICAL DEPARTMENT