REV	DESCRIPTION	DRAWN	DATE
		APPROVED	DATE

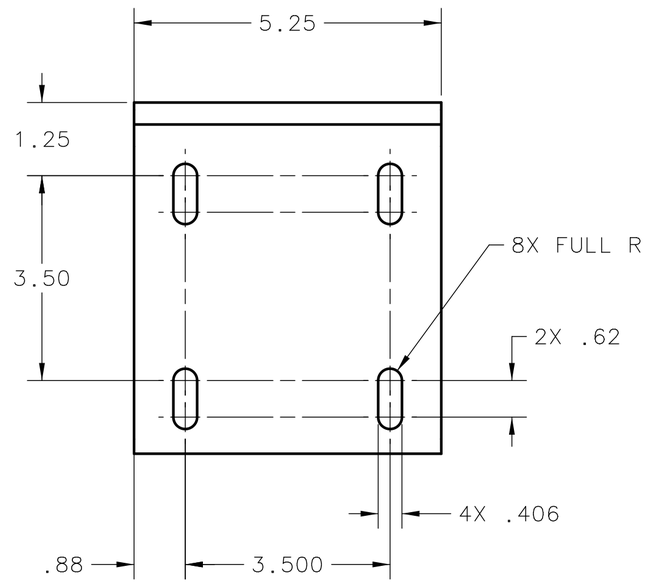

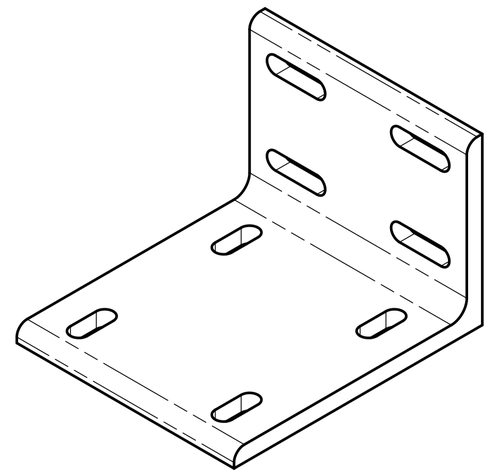

ISOMETRIC VIEW

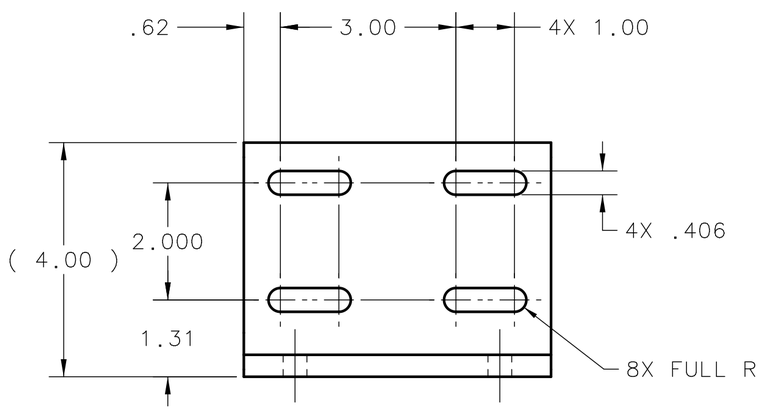

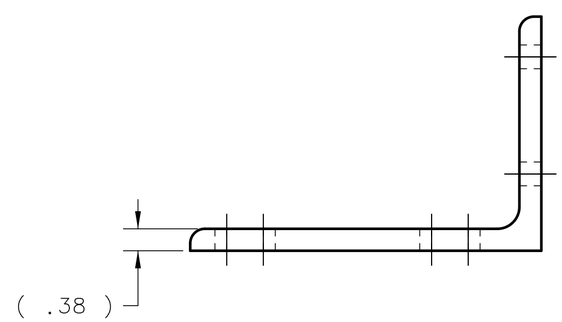

NOTES:

1. APPROX WEIGHT: 4.5 LBS

UNLESS OTHERWISE SPECIFIED			ORIGINATOR	E.CHI	07-JUN-2006
.XX	.XXX	ANGLES	DRAWN	T.SPERRY	31-JUL-2006
± .02	± .005	± - -	CHECKED		
1. BREAK ALL SHARP EDGES .015 MAX. 2. DO NOT SCALE DRAWING. 3. DIMENSIONS BASED UPON ASME Y14.5M-1994 4. MAX. ALL MACH. SURFACES 250 5. DRAWING UNITS: U.S. INCH			APPROVED		
			USED ON	MC-435964	
			MATERIAL	ANGLE, STEEL, L SHAPE, ASTM A36, 6 x 4 x 3/8	

FERMI NATIONAL ACCELERATOR LABORATORY
UNITED STATES DEPARTMENT OF ENERGY

SCIBOONE - MECHANICAL DETECTORS ANGLE EC HORIZONTAL

SCALE	DRAWING NUMBER	SHEET	REV
1:2	3954.330-MC-435962	1 OF 1	

CREATED WITH : Ideas12NXSeries | GROUP: PPD/MECHANICAL DEPARTMENT

Created: 13:13:59 on 15-09-06 (D-M-Y) By: sperry State: 1-INITIAL