REV	DESCRIPTION	DRAWN	DATE
		APPROVED	DATE

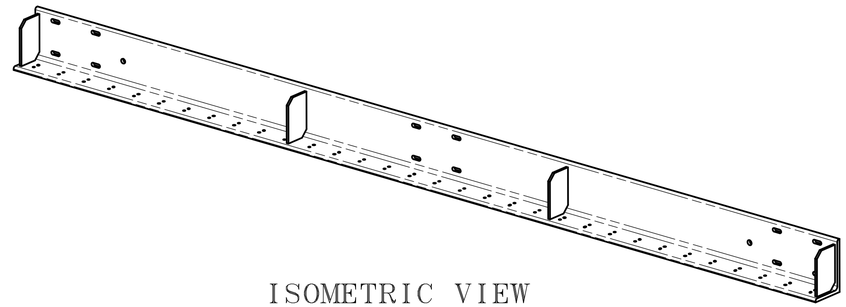

ISOMETRIC VIEW

SCALE: 1/8

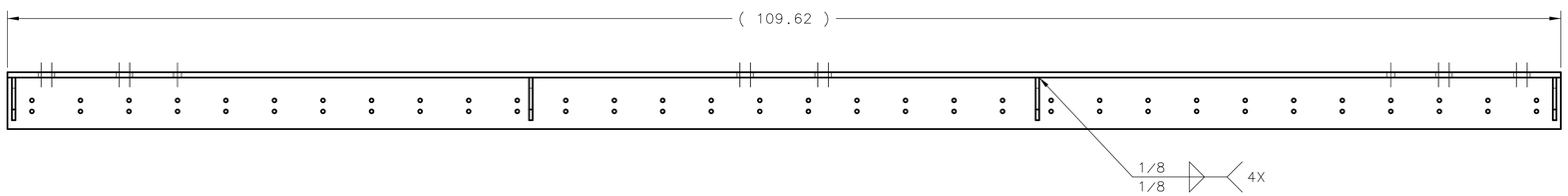

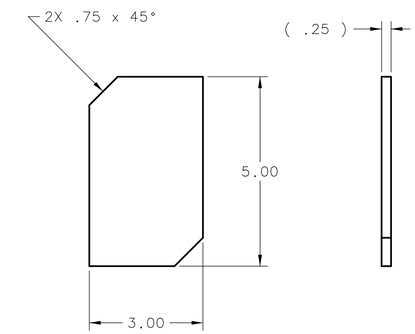

DETAIL A

ITEM 2 DETAIL
TYP 4 PLACES
SCALE: 1/2

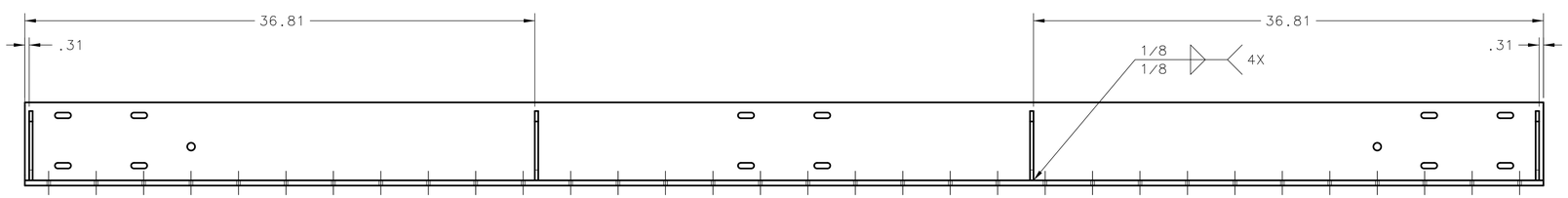

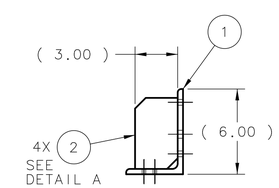

ITEM	PART NO.	DESCRIPTION OR SIZE	QTY.
2	COML	STEEL PLATE, HOT ROLLED, 1/4 THK, ASTM A36	4
1	MD-435925	HORIZONTAL SUPPORT ANGLE	1

PARTS LIST

UNLESS OTHERWISE SPECIFIED			ORIGINATOR	E.CHI	07-JUN-2006
.XX	.XXX	ANGLES	DRAWN	T.SPERRY	02-AUG-2006
± .06	± - -	± - -	CHECKED		
			APPROVED		

1. BREAK ALL SHARP EDGES .015 MAX.
2. DO NOT SCALE DRAWING.
3. DIMENSIONS BASED UPON ASME Y14.5M-1994
4. MAX. ALL MACH. SURFACES 250
5. DRAWING UNITS: U.S. INCH

USED ON: ME-435931

MATERIAL: SEE PARTS LIST ABOVE

FERMI NATIONAL ACCELERATOR LABORATORY
UNITED STATES DEPARTMENT OF ENERGY

SCIBOONE - MECHANICAL
DETECTORS
HORIZ EC SUPP ANGLE WELDMENT

SCALE	DRAWING NUMBER	SHEET	REV
3/16 & AS NOTED	3954.330-MD-435967	1 OF 1	

CREATED WITH : Ideas12NXSeries | GROUP: PPD/MECHANICAL DEPARTMENT

NOTES:

1. ALL WELDMENTS MUST BE IN ACCORDANCE WITH STRUCTURAL WELDING CODE - AWS D1.1.
2. ALL WELD METALS ARE E70XX UNLESS OTHERWISE SPECIFIED.
3. PAINT WITH RED OXIDE DAMP-PROOF RUSTOLEUM PRIMER OR OR EQUIVALENT.
4. APPROX WEIGHT: 115.0 LBS