REV	DESCRIPTION	DRAWN / APPROVED	DATE / DATE
A	ADDED ITEM #18	J.MATESKI	11-DEC-2006
	ADDED NOTES 2 & 3	E.CHI	11-DEC-2006

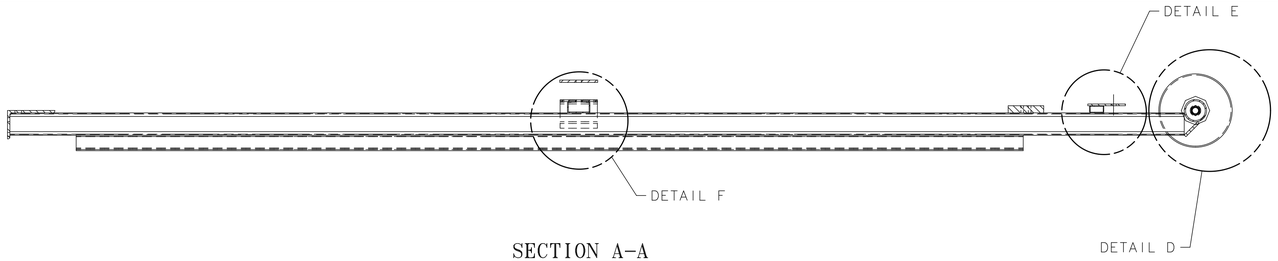

SECTION A-A

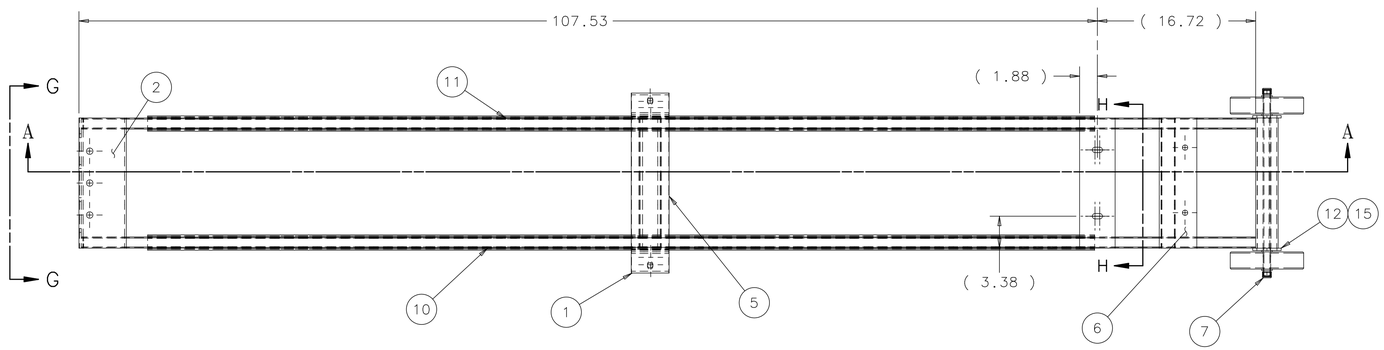

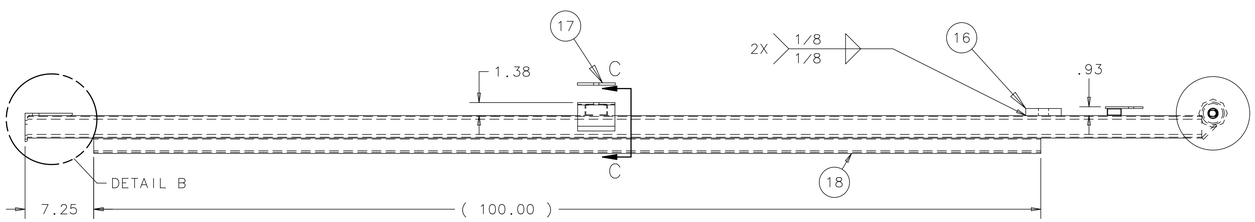

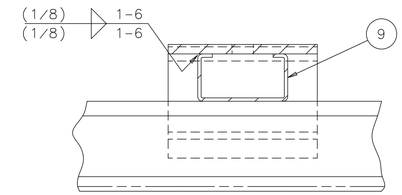

DETAIL F
SCALE: HALF

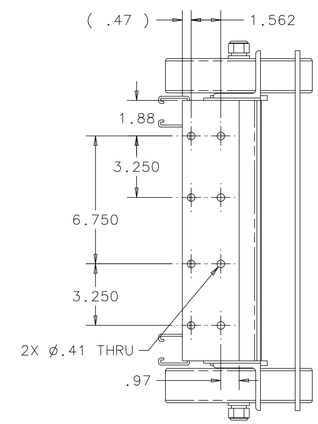

VIEW G-G
SCALE: 1/4

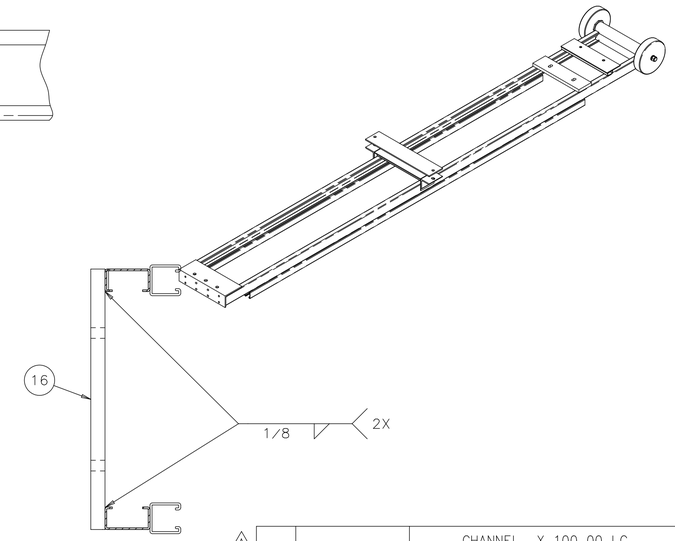

SECTION H-H
SCALE: 1/4

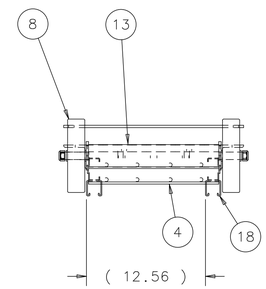

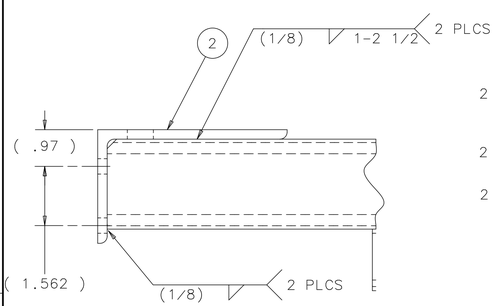

DETAIL B
SCALE: HALF

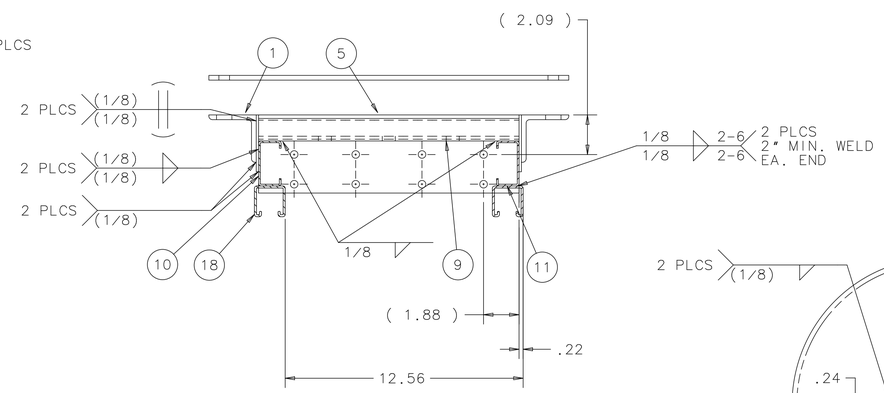

SECTION C-C
SCALE: 1:4

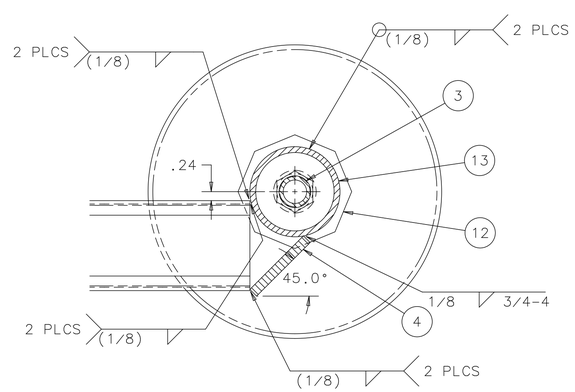

DETAIL D
SCALE: HALF

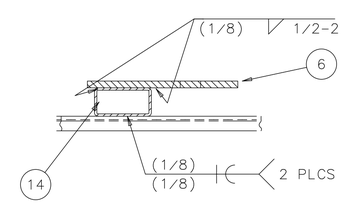

ITEM	PART NO.	DESCRIPTION OR SIZE	QTY.
18	COML	CHANNEL X 100.00 LG. UNISTRUT P-1000 OR EQUIVALENT	2
17	MC-444184	PLATE MID FIX LIFT VT EC	1
16	MC-444183	PLATE NEW FIX LIFT VT EC	1
15	COML	WASHER, 1.13 O.D. x .88 I.D. .06 THK. S.S.	2
14	COML	TUBE, 3/4 x 1-1/2 x .083 WALL 13.75 LG, ASTM A 513	1
13	COML	PIPE, ø2" SCH. 40 x 13.75 LG.	1
12	MB-444159	END CAP	2
11	MB-444158	C-CHANNEL, L.H.	1
10	MB-444157	C-CHANNEL, R.H.	1
9	MB-444156	C-CHANNEL	1
8	COML	RUBBER WHEEL, 8"O.D. x 1.81 WD .80 AXLE DIA.	2
7	COML	PIPE CAP, HEX HD, 1/2NPT	2
6	MB-444155	PLATE	1
5	COML	PLATE, 13.75 x 3.94 x.18 THK, ASTM A36 STEEL	1
4	COML	PLATE, 13.75 x 2.00 x.25 THK, ASTM A36 STEEL	1
3	MB-444154	WHEEL AXLE	1
2	MB-444153	ANGLE	1
1	MB-444152	ANGLE	2

PARTS LIST

UNLESS OTHERWISE SPECIFIED					
.XX	.XXX	ANGLES	ORIGINATOR	E.CHI	16-OCT-2006
± .03	± .010	± 1°	DRAWN	V.MAJDANSKI	16-OCT-2006
			CHECKED	J.RAUCH	08-NOV-2006
			APPROVED	E.CHI	08-NOV-2006

1. BREAK ALL SHARP EDGES .015 MAX.
2. DO NOT SCALE DRAWING.
3. DIMENSIONS BASED UPON ASME Y14.5M-1994
4. MAX. ALL MACH. SURFACES 125
5. DRAWING UNITS: U.S. INCH

USED ON

MATERIAL: SEE PARTS LIST ABOVE

FERMI NATIONAL ACCELERATOR LABORATORY
UNITED STATES DEPARTMENT OF ENERGY

SCIBOONE - MECHANICAL DETECTORS LIFTING JIG

SCALE	DRAWING NUMBER	SHEET	REV
1:8 AS NOTED	3954.330-MD-444160	1 OF 1	A

CREATED WITH : Ideas12NXSeries | GROUP: PPD/MECHANICAL DEPARTMENT

NOTES:

1. ITEMS #16 & #17 ARE NEW PARTS BEING ADDED TO THE EXISTING SUPPLIED LIFTING JIG.
2. ALL WELDMENTS MUST BE IN ACCORDANCE WITH STRUCTURAL WELDING CODE - AWS D1.1.
3. ALL WELD FILLER METALS ARE E70XX UNLESS OTHERWISE SPECIFIED.

NOTICE: IMAGE OBTAINED FROM FERMILAB WEB SITE

This information is provided for REFERENCE use only. Not for MANUFACTURE or DESIGN INFORMATION. All information contained in this document represents work sponsored by an agency of the U.S. Government. Neither the U.S. Government nor any agency thereof, nor Universities Research Association, Inc., nor any of their employees or officers, makes any warranty, express or implied, or assumes any legal liability or responsibility for the accuracy, completeness, or usefulness of any information, apparatus, product or process disclosed, or represents that its use would not infringe privately owned rights.