REV	DESCRIPTION	DRAWN	DATE
		APPROVED	DATE

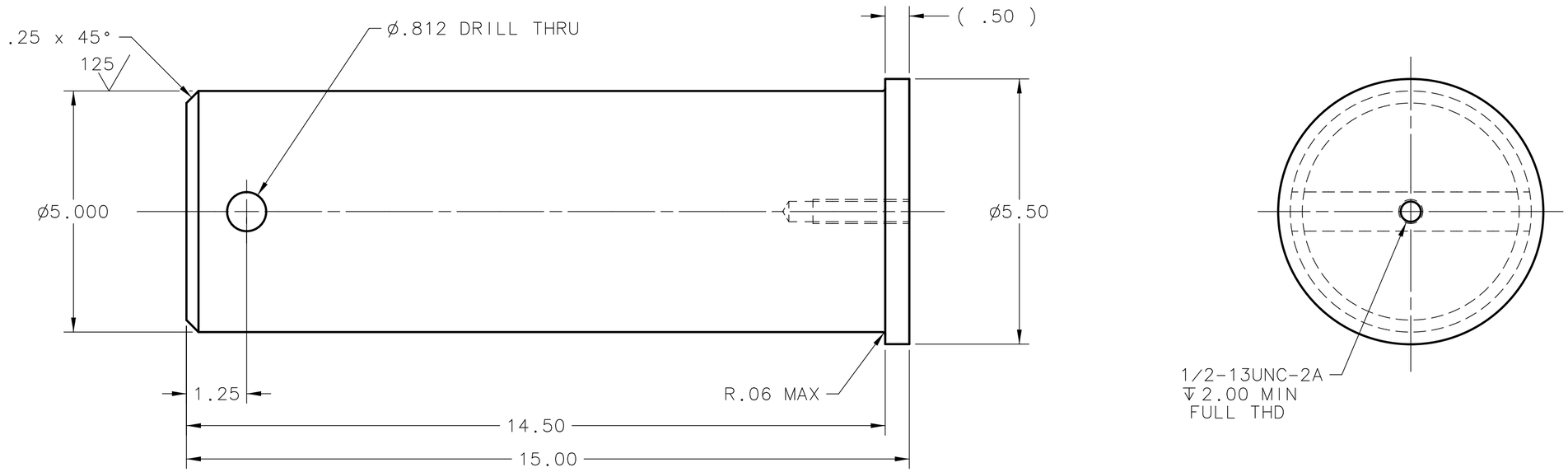

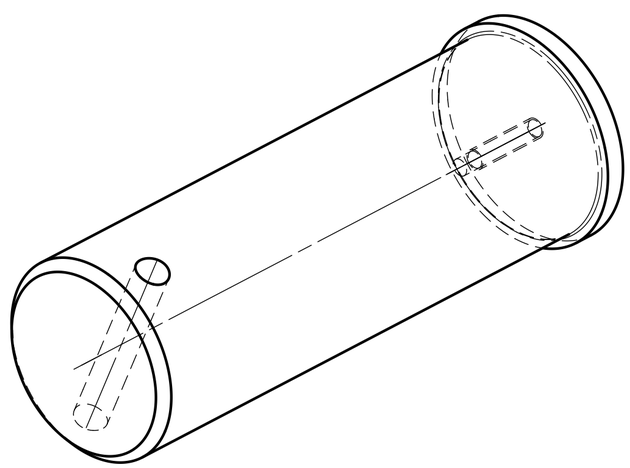

ISOMETRIC VIEW

SCALE 3/8

NOTES:

1. APPROX WEIGHT: 85 LBS.

UNLESS OTHERWISE SPECIFIED			ORIGINATOR	E.CHI	31-JAN-2007
.XX	.XXX	ANGLES	DRAWN	T.SPERRY	31-JAN-2007
± .02	± .005	± 1°	CHECKED		
			APPROVED		

1. BREAK ALL SHARP EDGES .015 MAX.
2. DO NOT SCALE DRAWING.
3. DIMENSIONS BASED UPON ASME Y14.5M-1994
4. MAX. ALL MACH. SURFACES 250
5. DRAWING UNITS: U.S. INCH

USED ON

MATERIAL: COLD FINISHED STEEL, C1018, ASTM A108

FERMI NATIONAL ACCELERATOR LABORATORY
UNITED STATES DEPARTMENT OF ENERGY

SCIBOONE - MECHANICAL DETECTORS PIN LIFTING EC

SCALE	DRAWING NUMBER	SHEET	REV
1/2 & AS NOTED	3954.330-MC-444439	1 OF 1	

CREATED WITH : Ideas12NXSeries | GROUP: PPD/MECHANICAL DEPARTMENT