REV	DESCRIPTION	DRAWN	DATE
		APPROVED	DATE

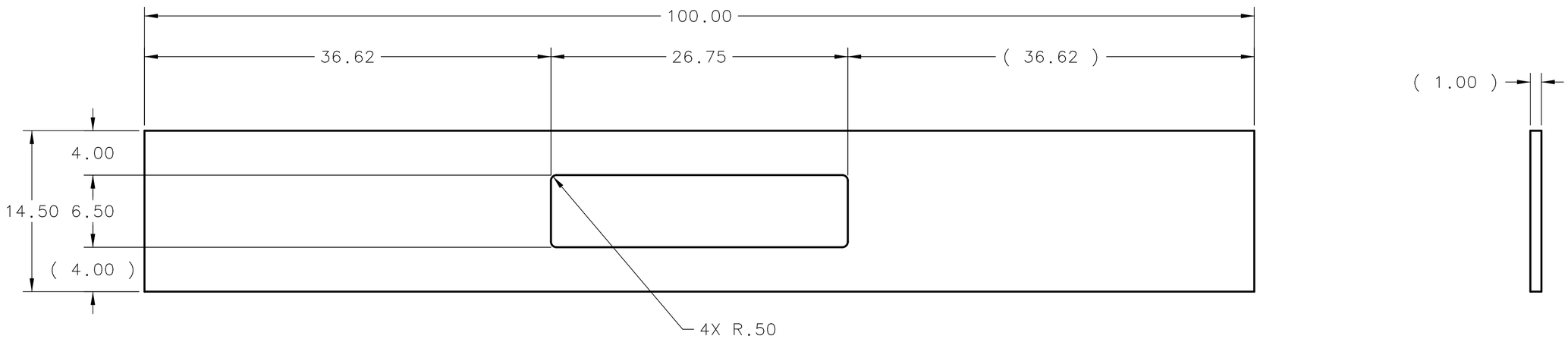

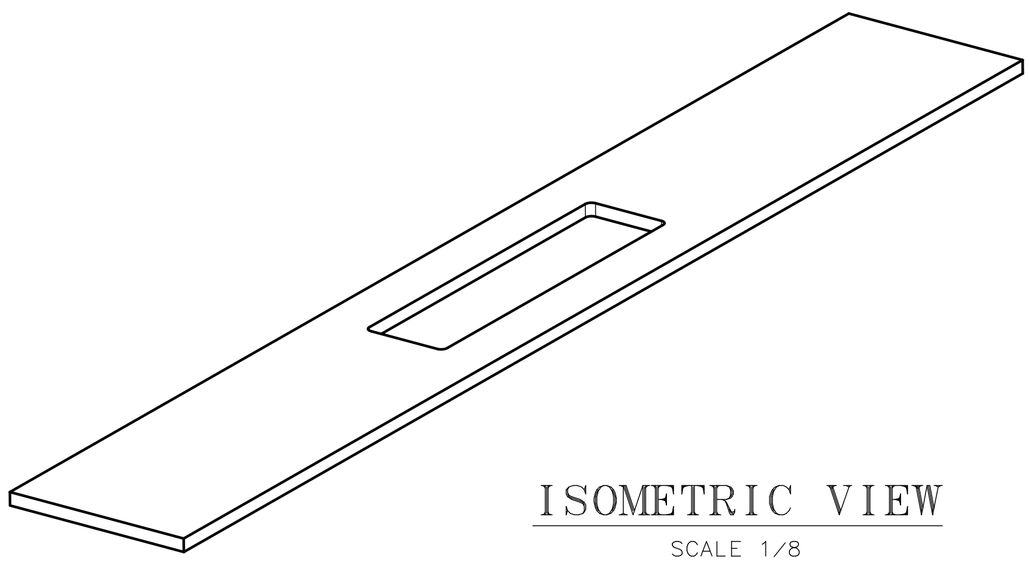

ISOMETRIC VIEW

SCALE 1/8

UNLESS OTHERWISE SPECIFIED			ORIGINATOR	E.CHI	29-JAN-2007
.XX	.XXX	ANGLES	DRAWN	T.SPERRY	29-JAN-2007
± .03	± - -	± - -	CHECKED		
			APPROVED		

1. BREAK ALL SHARP EDGES .015 MAX.
2. DO NOT SCALE DRAWING.
3. DIMENSIONS BASED UPON ASME Y14.5M-1994
4. MAX. ALL MACH. SURFACES 250
5. DRAWING UNITS: U.S. INCH

USED ON: ME-444427

MATERIAL: PLATE, HOT ROLLED CARBON STEEL, 1" THK, ASTM A36

FERMI NATIONAL ACCELERATOR LABORATORY
UNITED STATES DEPARTMENT OF ENERGY

SCIBOONE - MECHANICAL DETECTORS PLATE SUPPORT CTR TOP

SCALE	DRAWING NUMBER	SHEET	REV
1:8	3954.330-MC-444426	1 OF 1	

CREATED WITH : Ideas12NXSeries | GROUP: PPD/MECHANICAL DEPARTMENT

Created: 15:20:01 on 31-01-07 (D-M-Y) By: sperry State: 1-INITIAL