REV	DESCRIPTION	DRAWN	DATE
		APPROVED	DATE

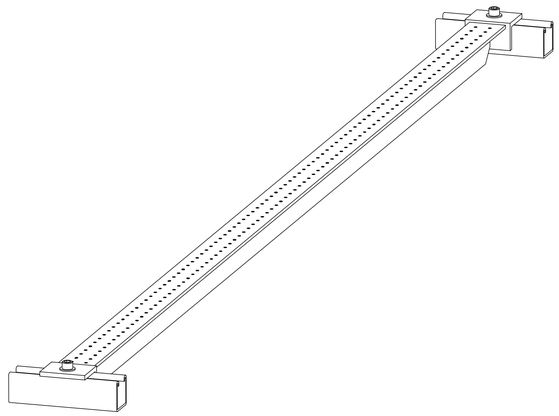

ISOMETRIC VIEW

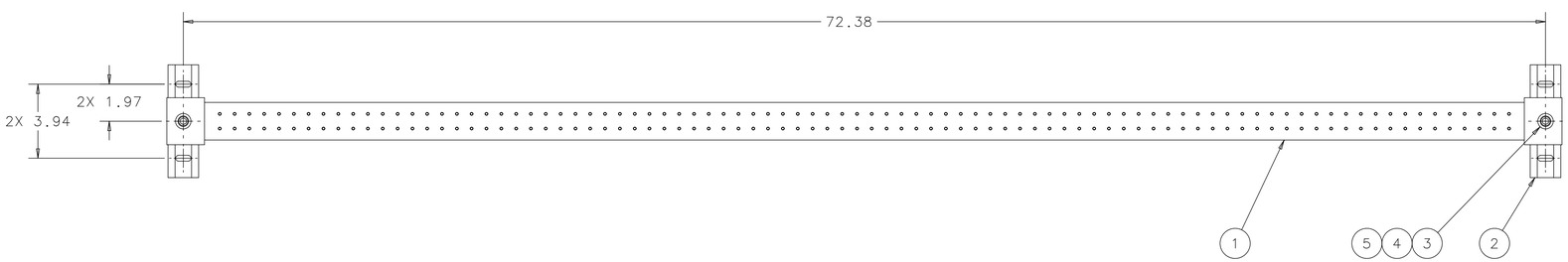

ITEM	PART NO.	DESCRIPTION OR SIZE	QTY.
5	COML	SCREW, SKT HD CAP, ALLOY STEEL, BLACK OXIDE, 3/8-16 x 1-1/4 LG, McMASTER-CARR #91251A626	2
4	COML	WASHER, FLAT, ZINC-PLATED STEEL, USS STD, SCREW SIZE 3/8, McMASTER-CARR #90108A417	2
3	COML	NUT, CHANNEL FITTING, W/SPRING, 3/8-16, UNISTRUT P/N P1008, B-LINE P/N N228	2
2	MB-435840	UNISTRUT P1000 6 HOLES	2
1	MD-435915	TEE ANGLE WELDMENT SCIBAR	1

PARTS LIST

UNLESS OTHERWISE SPECIFIED					
.XX	.XXX	ANGLES	ORIGINATOR	E.CHI	07-JUN-2006
± .02	± - -	± - -	DRAWN	J.MATESKI	23-OCT-2006
			CHECKED	J.RAUCH	12-DEC-2006
			APPROVED	E.CHI	12-DEC-2006

1. BREAK ALL SHARP EDGES MAX.
2. DO NOT SCALE DRAWING.
3. DIMENSIONS BASED UPON ASME Y14.5M-1994
4. MAX. ALL MACH. SURFACES √
5. DRAWING UNITS: U.S. INCH

USED ON: 3954.330-ME-444162

MATERIAL: SEE PARTS LIST ABOVE

FERMI NATIONAL ACCELERATOR LABORATORY
UNITED STATES DEPARTMENT OF ENERGY

SCIBOONE - MECHANICAL DETECTORS BEAM FRAME PMT SCIBAR

SCALE	DRAWING NUMBER	SHEET	REV
1:4	3954.330-MD-444163	1 OF 1	

CREATED WITH : Ideas12NXSeries | GROUP: PPD/MECHANICAL DEPARTMENT

NOTICE: IMAGE OBTAINED FROM FERMILAB WEB SITE

This information is provided for REFERENCE use only. Not for MANUFACTURE, or DESIGN INFORMATION. All information contained in this document represents work sponsored by an agency of the U.S. Government. Neither the U.S. Government nor any agency thereof, nor Universities Research Association, Inc., nor any of their employees or officers, makes any warranty, express or implied, or assumes any legal liability or responsibility for the accuracy, completeness, or usefulness of any information, apparatus, product or process disclosed, or represents that its use would not infringe privately owned rights.