REV	DESCRIPTION	DRAWN	DATE
		APPROVED	DATE

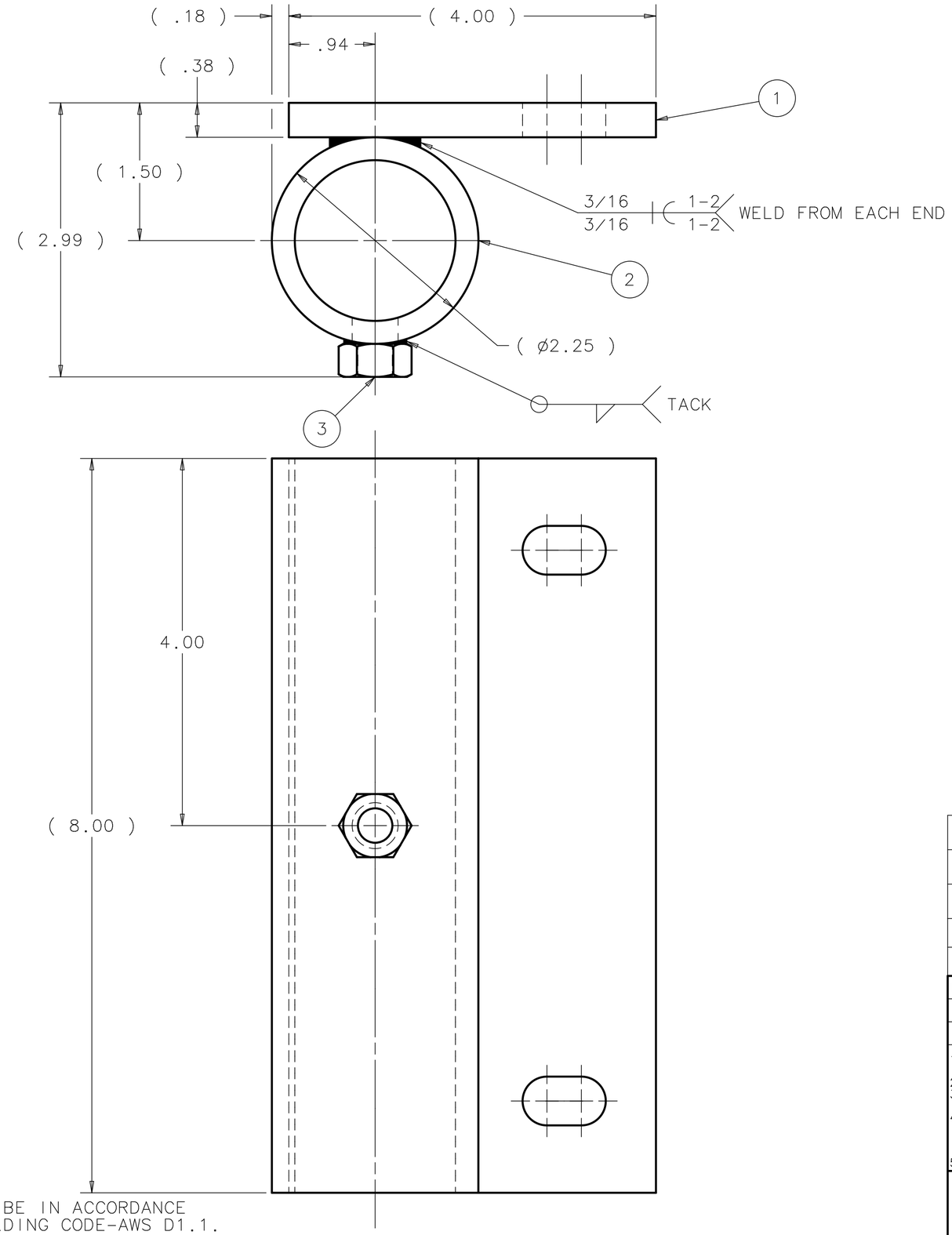

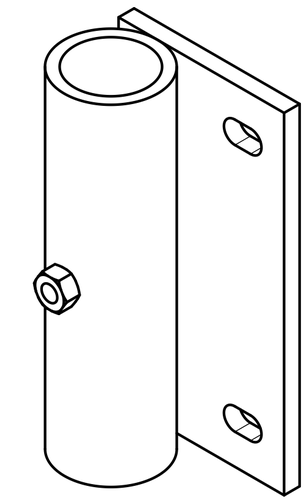

ISOMETRIC VIEW
SCALE= 1:2

NOTES:
1. ALL WELDMENTS MUST BE IN ACCORDANCE WITH STRUCTURAL WELDING CODE-AWS D1.1.
2. ALL WELD FILLER METALS ARE E70XX UNLESS OTHERWISE SPECIFIED.
3. PAINT WITH RED OXIDE DAMP-PROOF RUST-OLEUM PRIMER OR EQUIVALENT.
4. PAINT WITH YELLOW RUST-OLEUM.
5. APPROX WGT: 8.00 LBS.

ITEM	PART NO.	DESCRIPTION OR SIZE	QTY.
3	COM'L.	HEAVY HEX NUT;3/8-16 UNC; GRADE 5 STEEL	1
2	MC-444016	RAILING MOUNTING TUBE	1
1	MC-444017	RAILING MOUNTING PLATE	1

PARTS LIST

UNLESS OTHERWISE SPECIFIED					
.XX	.XXX	ANGLES	ORIGINATOR	E.CHI	24-AUG-2006
± .03	± ***	± ***	DRAWN	B.ELLISON	24-AUG-2006
			CHECKED	J.RAUCH	05-SEP-2006
			APPROVED	E.CHI	07-SEP-2006

1. BREAK ALL SHARP EDGES .015 MAX.
2. DO NOT SCALE DRAWING.
3. DIMENSIONS BASED UPON ASME Y14.5M-1994
4. MAX. ALL MACH. SURFACES 250
5. DRAWING UNITS: U.S. INCH

USED ON: ME-444053

MATERIAL: SEE PARTS LIST ABOVE

FERMI NATIONAL ACCELERATOR LABORATORY
UNITED STATES DEPARTMENT OF ENERGY

SCIBOONE - MECHANICAL RAILING SYSTEM SCIBAR RAILING MOUNT WELDMENT

SCALE	DRAWING NUMBER	SHEET	REV
1:1 & AS NOTED	3954.330-MC-444018	1 OF 2	

CREATED WITH : Ideas12NXSeries | GROUP: PPD/MECHANICAL DEPARTMENT