REV	DESCRIPTION	DRAWN	DATE
		APPROVED	DATE

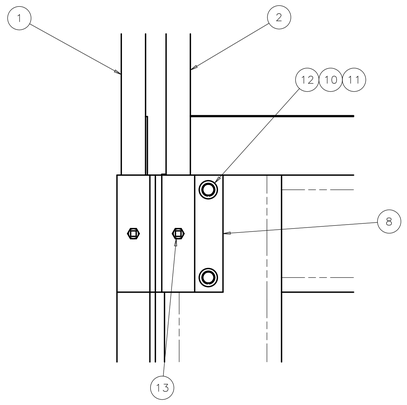

DETAIL B
SCALE= 1:4

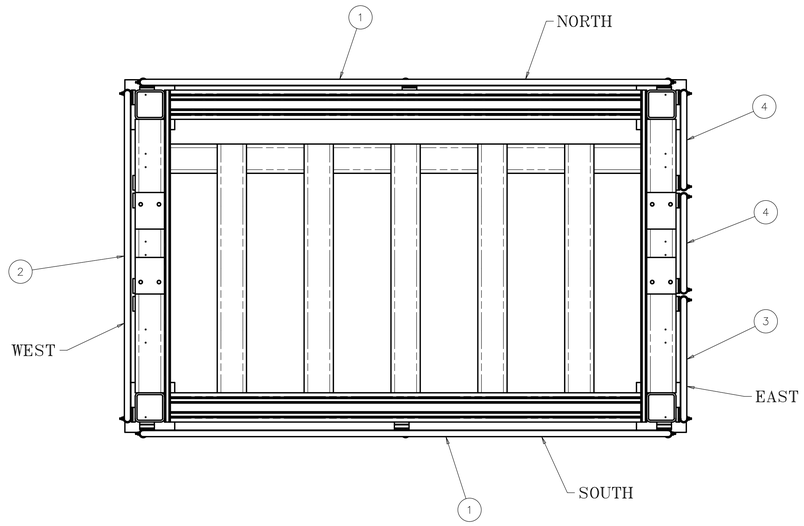

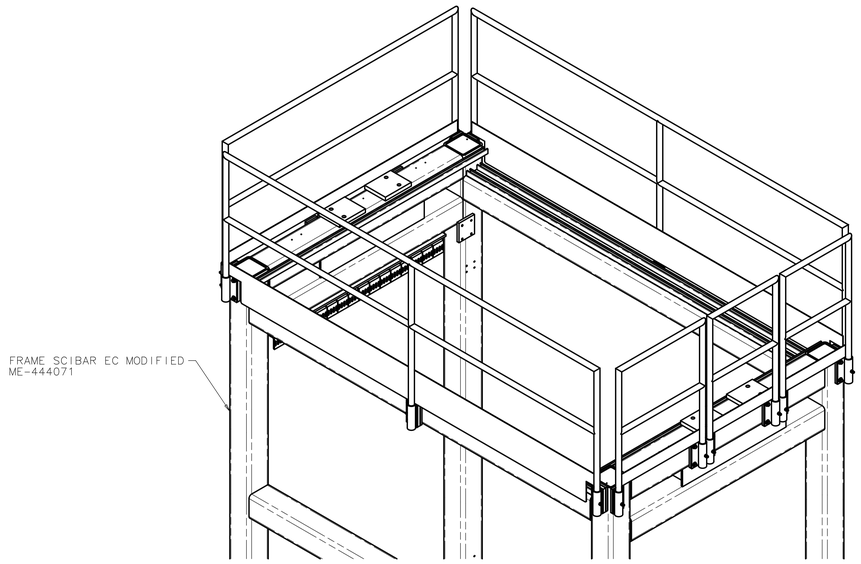

ISOMETRIC VIEW

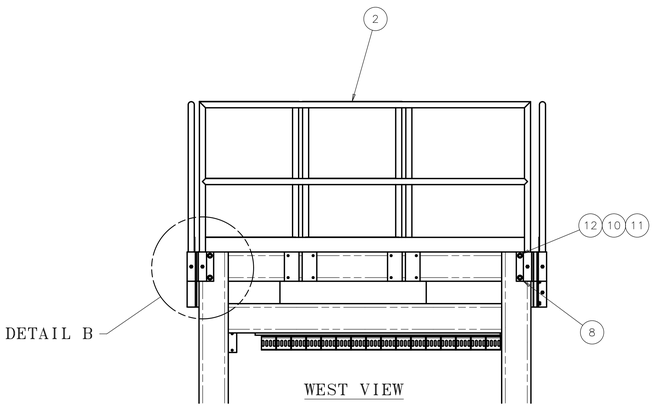

WEST VIEW

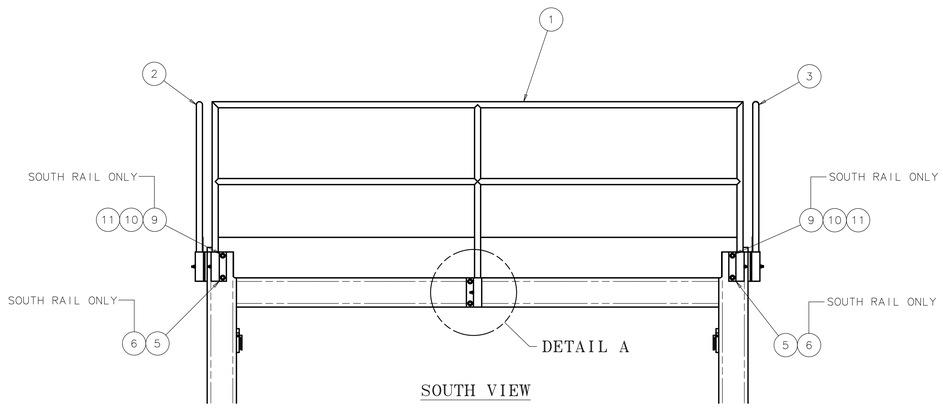

SOUTH VIEW

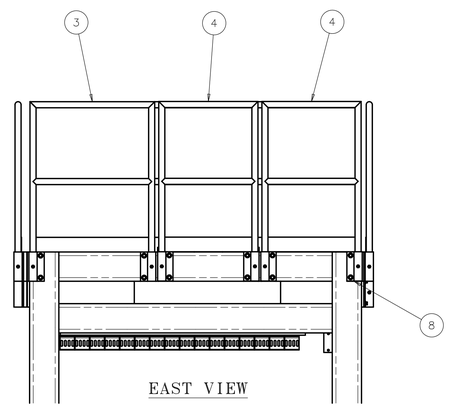

EAST VIEW

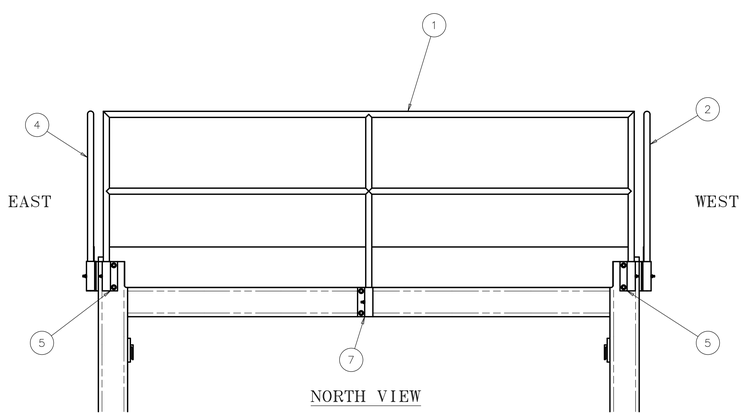

NORTH VIEW

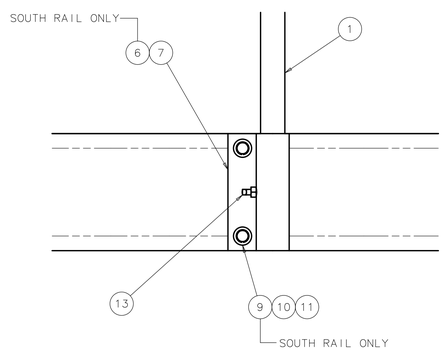

DETAIL A
SCALE= 1:4

ITEM	PART NO.	DESCRIPTION OR SIZE	QTY.
13	COM'L.	SQUARE HEAD CONE POINT SET SCREW; 3/8-16 UNC X 1.00 LG.;ALLOY STEEL	14
12	COM'L.	HEX HEAD CAP SCREW;1/2-13 UNC X 1.00 LG.; FULL THREAD;CARBON STEEL GRADE 5	22
11	COM'L.	WASHER;LOCK;1/2 SCREW; CARBON STEEL	28
10	COM'L.	WASHER;FLAT;1/2 SCREW; CARBON STEEL	28
9	COM'L.	HEX HEAD CAP SCREW;1/2-13 UNC X 2.00 LG.; CARBON STEEL GRADE 5	6
8	MC-444018	RAILING MOUNT WELDMENT	8
7	MC-444023	RAILING MOUNT WELDMENT VERSION 3	2
6	MC-444048	RAILING SHIM-SOUTH SCIBAR	AS REQ'D.
5	MC-444022	RAILING MOUNT WELDMENT VERSION 2	4
4	MD-444014	RAILING GATE SCIBAR	2
3	MD-444013	RAILING SECTION END EAST	1
2	ME-444003	RAILING WEST SCIBAR WELDMENT	1
1	MD-444012	RAILING NORTH SCIBAR WELDMENT	2

PARTS LIST

UNLESS OTHERWISE SPECIFIED			ORIGINATOR	E.CHI	30-AUG-2006
.XX	.XXX	ANGLES	DRAWN	B.ELLISON	30-AUG-2006
± ••	± •••	± •••	CHECKED	J.RAUCH	07-SEP-2006
			APPROVED	E.CHI	07-SEP-2006

1. BREAK ALL SHARP EDGES .015 MAX.
2. DO NOT SCALE DRAWING.
3. DIMENSIONS BASED UPON ASME Y14.5M-1994
4. MAX. ALL MACH. SURFACES 250
5. DRAWING UNITS: U.S.INCH

USED ON

MATERIAL
SEE PARTS LIST ABOVE

FERMI NATIONAL ACCELERATOR LABORATORY
UNITED STATES DEPARTMENT OF ENERGY

SCIBOONE - MECHANICAL RAILING SYSTEM SCIBAR DARKROOM RAILING EC INSTALLATION

SCALE	DRAWING NUMBER	SHEET	REV
1:16 & AS NOTED	3954.330-ME-444053	1 OF 2	

CREATED WITH : Ideas12NXSeries GROUP: PPD/MECHANICAL DEPARTMENT