REV	DESCRIPTION	DRAWN	DATE
		APPROVED	DATE

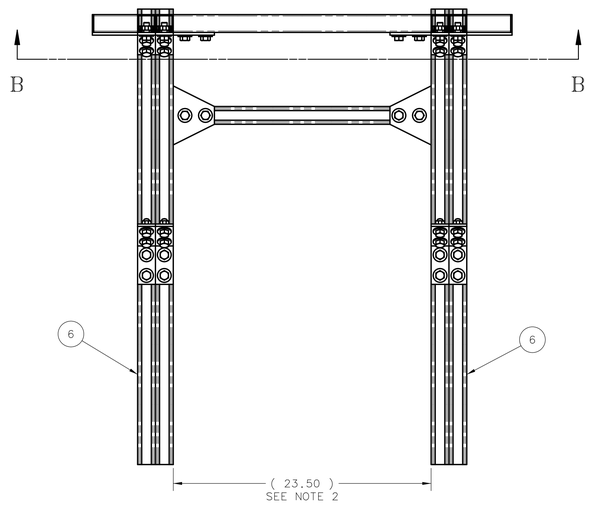

FRONT VIEW

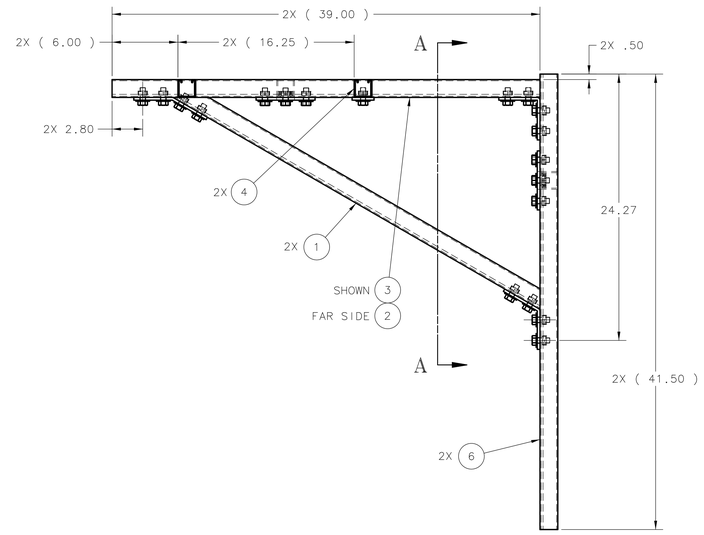

SIDE VIEW

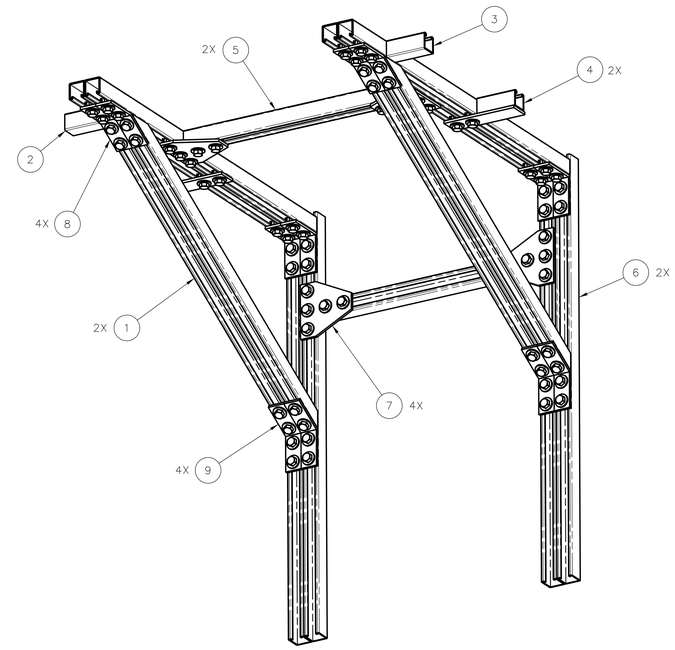

ISOMETRIC VIEW

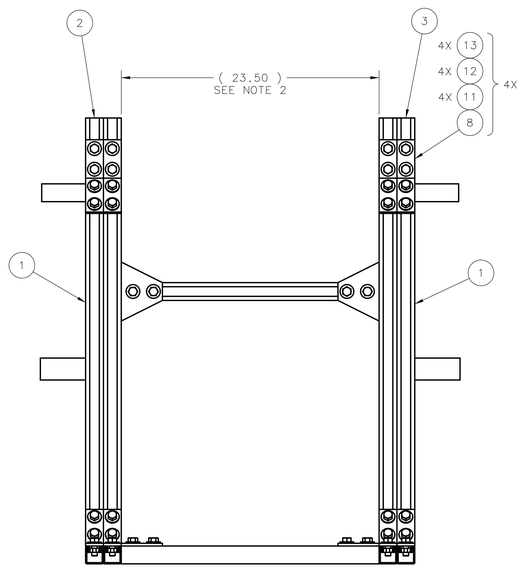

BOTTOM VIEW

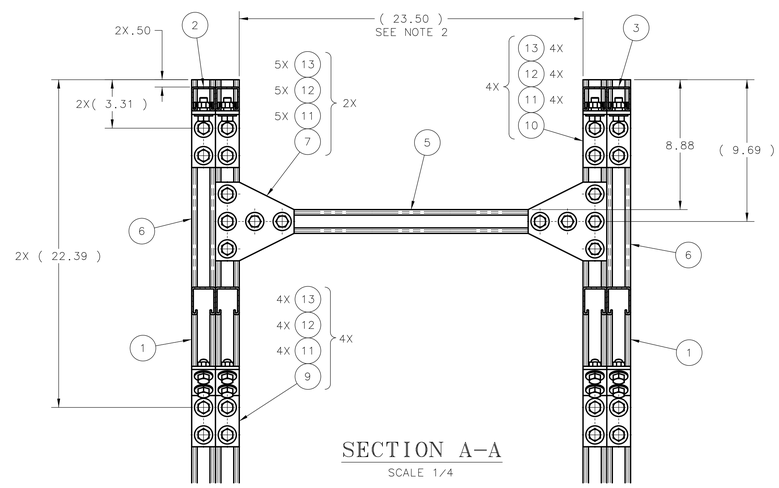

SECTION A–A

SCALE 1/4

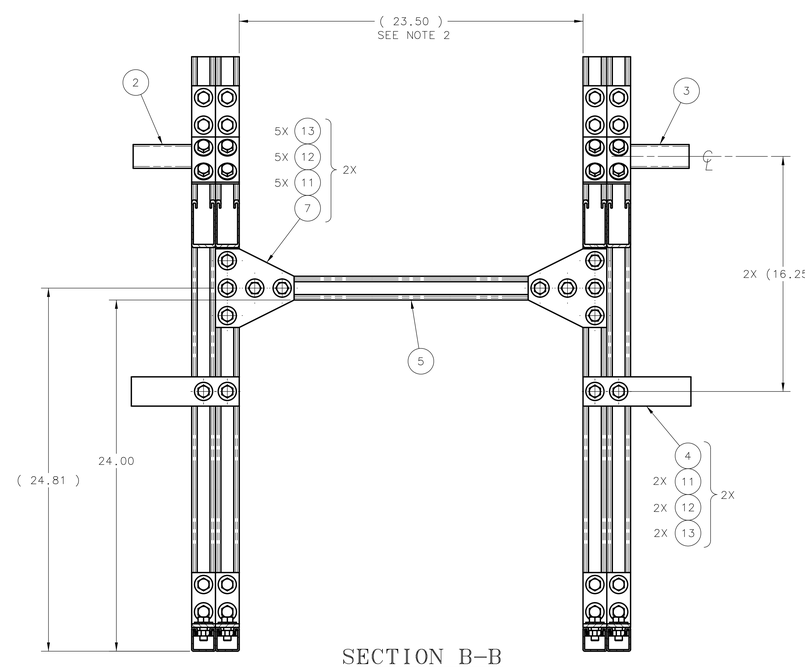

SECTION B–B

SCALE 1/4

NOTES:

1. APPROX WEIGHT: 122 LBS
2. THE ACTUAL DIMENSION WILL BE BASED ON THE FIELD DISTANCE BETWEEN TWO RACK VME WELDMENTS. (SEE DWGS ME-444240 AND MC-444171)

ITEM	PART NO.	DESCRIPTION OR SIZE	QTY.
13	1226-0632	SCREW, CAP, HEX HD, TYPE 18-8 S.S., CLASS 2A THD, 1/2-13UNC x 1-1/4 LG	72
12	1218-0700	WASHER, FLAT, TYPE 18-8 S.S., SCREW SIZE 1/2	72
11	COML	NUT, CHANNEL FITTING WITH SPRING, 1/2-13 THD, UNISTRUT P/N P1010 OR B-LINE P/N N225	72
10	COML	CHANNEL FITTING, 4 HOLE CORNER ANGLE, GREEN, B-LINE P/N B115	4
9	COML	CHANNEL FITTING, 4 HOLE OPEN ANGLE, 60°, B-LINE P/N B250, GREEN	4
8	COML	CHANNEL FITTING, 4 HOLE OPEN ANGLE, 30°, B-LINE P/N B246, GREEN	4
7	COML	CHANNEL FITTING, 5 HOLE TEE GUSSET PLATE, GRN, UNISTRUT P/N P1726 OR B-LINE P/N B532	4
6	COML	CHANNEL, STEEL, GRN FINISH, 1-5/8 HIGH x 3-1/4 WD x 41.50 LG, UNISTRUT P1001A OR B-LINE B24B	2
5	1243-1010	CHANNEL, STEEL, GRN FINISH, 1-5/8 HIGH x 1-5/8 WD x 23.38 LG, UNISTRUT P1000 OR B-LINE B22	2
4	MB-444271	MOUNT VME RACK WELDMENT	2
3	MC-444269	P1001A RGT VME SUPPORT WELDMENT	1
2	MC-444268	P1001A VME SUPPORT WELDMENT	1
1	MC-444299	CHANNEL P1001A VME SUPPORT	2

PARTS LIST

UNLESS OTHERWISE SPECIFIED			ORIGINATOR	E.CHI	07-JUN-2006
.XX	.XXX	ANGLES	DRAWN	T.SPERRY	28-NOV-2006
± .03	± - -	± - -	CHECKED	J.RAUCH	12-DEC-2006
1. BREAK ALL SHARP EDGES MAX.			APPROVED	E.CHI	12-DEC-2006
2. DO NOT SCALE DRAWING. 3. DIMENSIONS BASED UPON ASME Y14.5M-1994 4. MAX. ALL MACH. SURFACES			USED ON	ME-444240	
5. DRAWING UNITS: U.S.INCH			MATERIAL	SEE PARTS LIST ABOVE	

FERMI NATIONAL ACCELERATOR LABORATORY
UNITED STATES DEPARTMENT OF ENERGY

SCIBOONE – MECHANICAL DETECTORS
RACK SUPPORT VME ASSY

SCALE	DRAWING NUMBER	SHEET	REV
3/16 & AS NOTED	3954.330-ME-444309	1 OF 1	

CREATED WITH : Ideas12NXSeries GROUP: PPD/MECHANICAL DEPARTMENT

NOTICE: IMAGE OBTAINED FROM FERMILAB WEB SITE
This information is provided for REFERENCE use only. Not for MANUFACTURE, or DESIGN INFORMATION. All information contained in this document represents work sponsored by an agency of the U.S. Government. Neither the U.S. Government nor any agency thereof, nor Universities Research Association, Inc., nor any of their employees or officers, makes any warranty, express or implied, or assumes any legal liability or responsibility for the accuracy, completeness, or usefulness of any information, apparatus, product or process disclosed, or represents that its use would not infringe privately owned rights.