REV	DESCRIPTION	DRAWN	DATE
		APPROVED	DATE

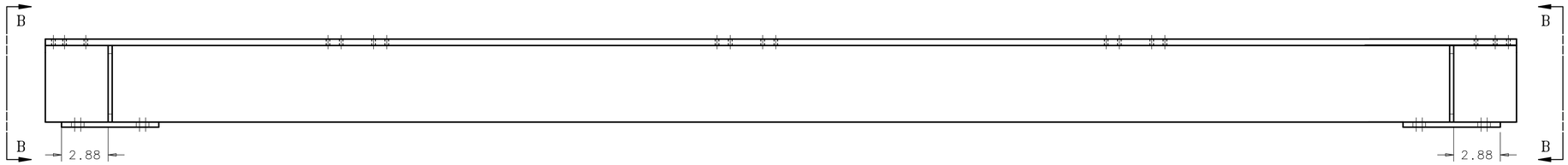

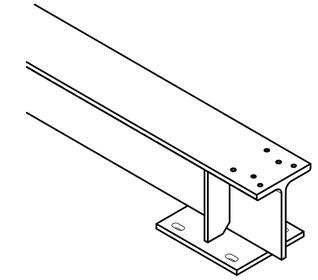

ISOMETRIC VIEW

(AT BOTH ENDS OF TEE)

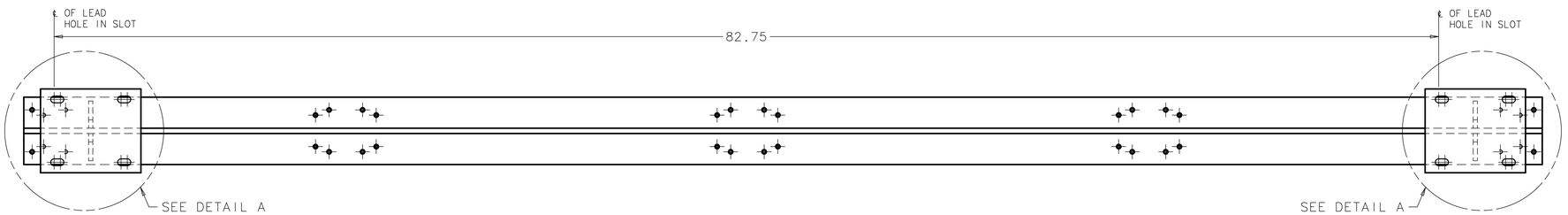

NOTES:

1. ALL WELDMENTS MUST BE IN ACCORDANCE WITH STRUCTURAL WELDING CODE - AWS D1.1.
2. ALL WELD FILLER METALS ARE E70XX UNLESS OTHERWISE SPECIFIED.
4. PAINT WITH RED OXIDE DAMP-PROOF RUST-OLEUM PRIMER OR EQUIVALENT, EXCEPT FOR ALL HOLES.

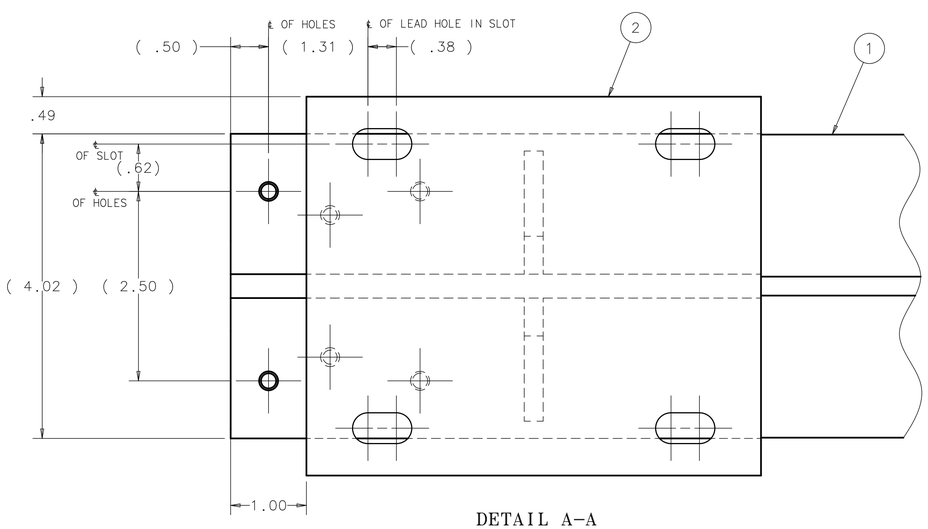

DETAIL A-A

SCALE= 1:1

(AT BOTH ENDS OF TEE)

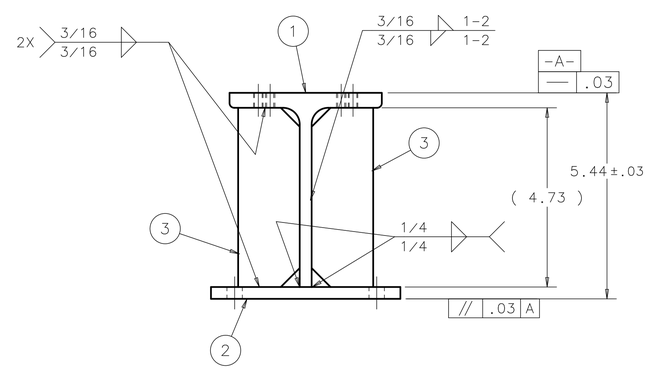

VIEW B-B

SCALE= 1:2

(AT BOTH ENDS OF TEE)

ITEM	PART NO.	DESCRIPTION OR SIZE	QTY.
3	MB-444041	DARKRM TOP, TEE GUSSET	4
2	MC-444040	DARKRM TOP, PLATE 2 TEES, 6X5	2
1	MD-444043	DARKRM TOP, TEE	1

PARTS LIST

UNLESS OTHERWISE SPECIFIED			ORIGINATOR	E.CHI	07-JUN-2006
.XX	.XXX	ANGLES	DRAWN	P.POLL	26-AUG-2006
± .03	± ---	± 1°	CHECKED	J.RAUCH	14-SEP-2006
			APPROVED	E.CHI	14-SEP-2006

1. BREAK ALL SHARP EDGES .015 MAX.
2. DO NOT SCALE DRAWING.
3. DIMENSIONS BASED UPON ASME Y14.5M-1994
4. MAX. ALL MACH. SURFACES 125
5. DRAWING UNITS: U.S. INCH

USED ON: ME-444076

MATERIAL: SEE PARTS LIST ABOVE

FERMI NATIONAL ACCELERATOR LABORATORY
UNITED STATES DEPARTMENT OF ENERGY

SCIBOONE - MECHANICAL DETECTORS
DARKRM TEE, GUSSET, PLATE WELDMENT

SCALE	DRAWING NUMBER	SHEET	REV
1:4 & NOTED	3954.330-MD-444042	1 OF 1	

CREATED WITH : Ideas12NXSeries | GROUP: PPD/MECHANICAL DEPARTMENT

NOTICE: IMAGE OBTAINED FROM FERMILAB WEB SITE

This information is provided for REFERENCE use only. Not for MANUFACTURE, or DESIGN INFORMATION. All information contained in this document represents work sponsored by an agency of the U.S. Government. Neither the U.S. Government nor any agency thereof, nor Universities Research Association, Inc., nor any of their employees or officers, makes any warranty, express or implied, or assumes any legal liability or responsibility for the accuracy, completeness, or usefulness of any information, apparatus, product or process disclosed, or represents that its use would not infringe privately owned rights.