REV	DESCRIPTION	DRAWN	DATE
		APPROVED	DATE

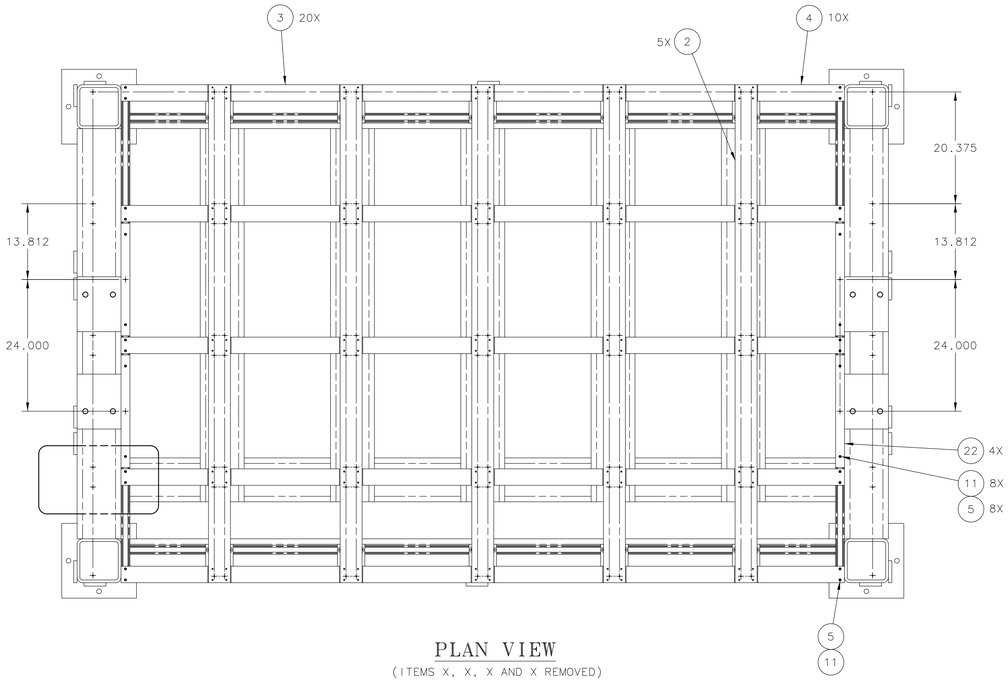

PLAN VIEW
(ITEMS X, X, X AND X REMOVED)

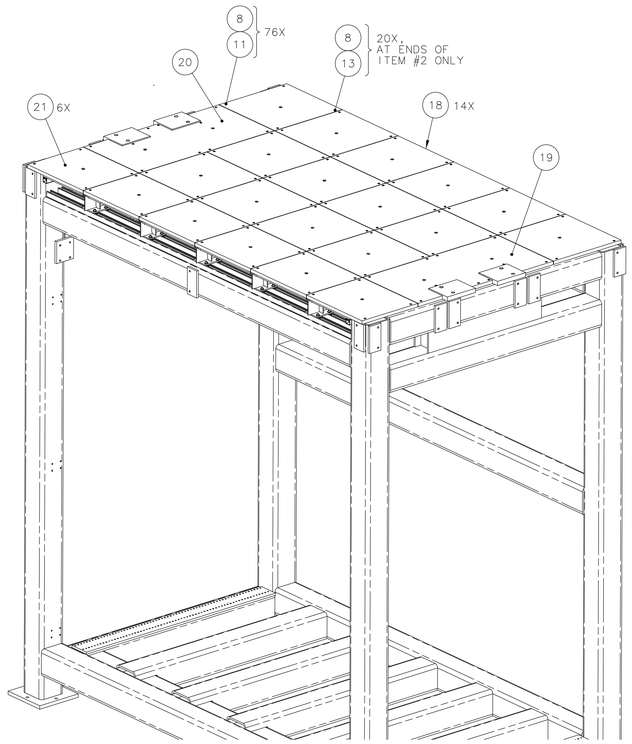

ISOMETRIC VIEW

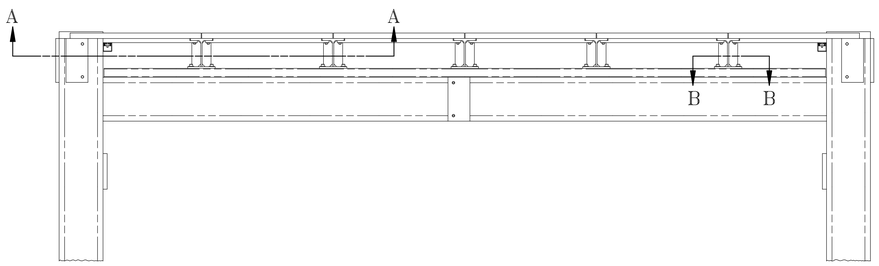

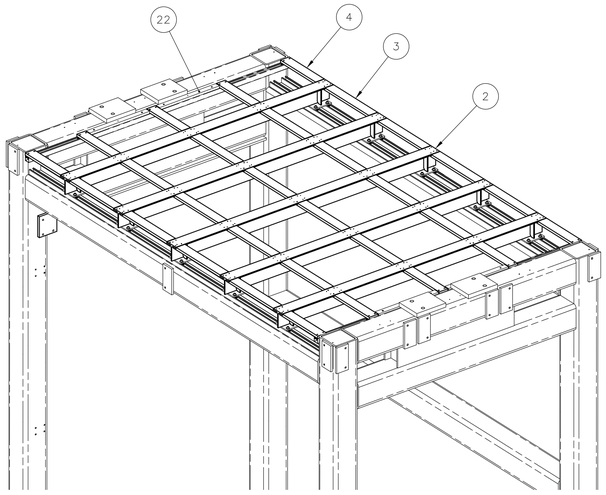

ISOMETRIC VIEW
(ITEMS X, X, X AND X REMOVED)

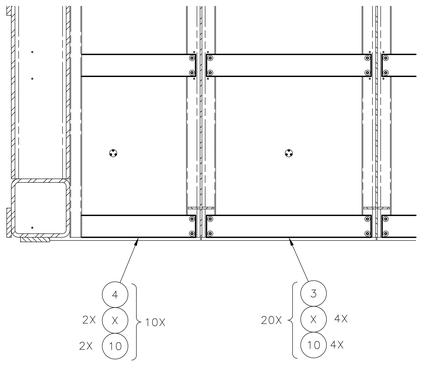

SECTION A–A
SCALE 1/8

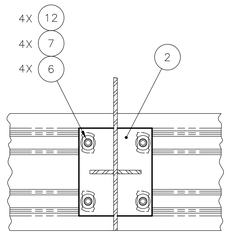

SECTION B–B
TYPICAL 10 PLACES
SCALE 1/4

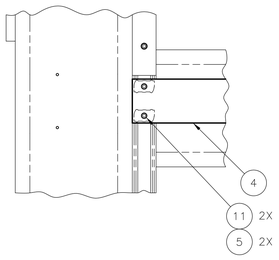

DETAIL C
TYPICAL 10 PLACES
SCALE 1/4

ITEM	PART NO.	DESCRIPTION OR SIZE	QTY.
22	X	XX	X
21	MC-444052	TOP PLYWOOD-D WELD NUT	6
20	MC-444051	TOP PLYWOOD-C WELD NUT	1
19	MC-444050	TOP PLYWOOD-B WELD NUT	1
18	MC-444049	TOP PLYWOOD-A WELD NUT	14
17	X	PLATE COUPLING TOP DKRM 1 x 24 x 19.75	6
16	X	PLATE COUPLING TOP DKRM 1 x 24 x 24	14
15	X	PLATE COUPLING WEST TOP DARKROOM	1
14	X	PLATE COUPLING EAST TOP DARKROOM	1
13	X	SCREW, SKT HD CAP, 1/4-20 x 1.00 LG.	X
12	X	SCREW, SKT HD CAP, 3/8-16 x 1.00 LG	X
11	X	SCREW, SKT HD CAP, 1/4-20 x 1.25 LG	X
10	X	SCREW, SKT HD CAP, 1/4-20 x .75 LG	X
9	X	X X	X
8	1218-	WASHER, FLAT, TYPE 18-8 S.S., SCREW SIZE #12	X
7	1218-0660	WASHER, FLAT, TYPE 18-8 S.S., SCREW SIZE 3/8	X
6	1240-1530	TWIRL NUT, TAP SIZE 3/8-16, B-LINE P/N TN224	X
5	1240-1515	TWIRL NUT, TAP SIZE 1/4-20, B-LINE P/N TN224	X
4	MC-444038	PLATE CONT END 15.81 x 3.00 x .75	10
3	MC-444039	PLATE CONT DARKROOM 22.5 x 3.00 x .75	20
2	MD-444042	TEES SUPT DARKROOM TOP WELDMENT	5
1	ME-444071	FRAME SCIBAR EC MODIFIED	REF

PARTS LIST

UNLESS OTHERWISE SPECIFIED	ORIGINATOR	E.CHI	07-JUN-2006
	DRAWN	T.SPERRY	08-SEP-2006
± ± ±	CHECKED		
1. BREAK ALL SHARP EDGES MAX.	APPROVED		
2. DO NOT SCALE DRAWING. 3. DIMENSIONS BASED UPON	USED ON		
4. MAX. ALL MACH. SURFACES	MATERIAL	SEE PARTS LIST ABOVE ASTM A36	
5. DRAWING UNITS:			

FERMI NATIONAL ACCELERATOR LABORATORY
UNITED STATES DEPARTMENT OF ENERGY

SCIBOONE – MECHANICAL DETECTORS DARKROOM TOP EC INSTALLATION

SCALE	DRAWING NUMBER	SHEET	REV
1:2	3954.330-ME-444076	1 OF 1	

CREATED WITH : Ideas12NXSeries GROUP: PPD/MECHANICAL DEPARTMENT