REV	DESCRIPTION	DRAWN	DATE
		APPROVED	DATE
A	WEB THICKNESS REF DIM .315 WAS INCORRECT	T.SPERRY	18-OCT-2006

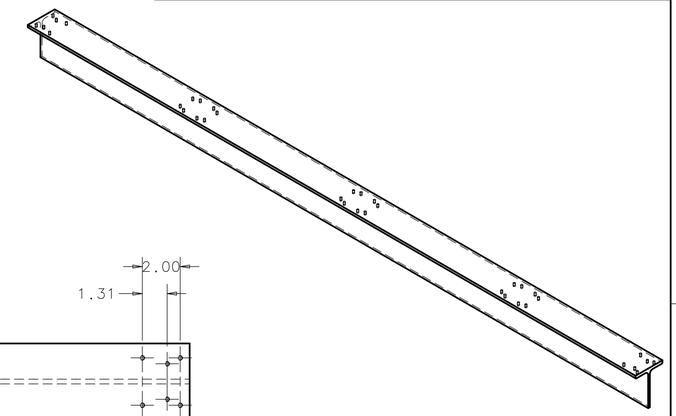

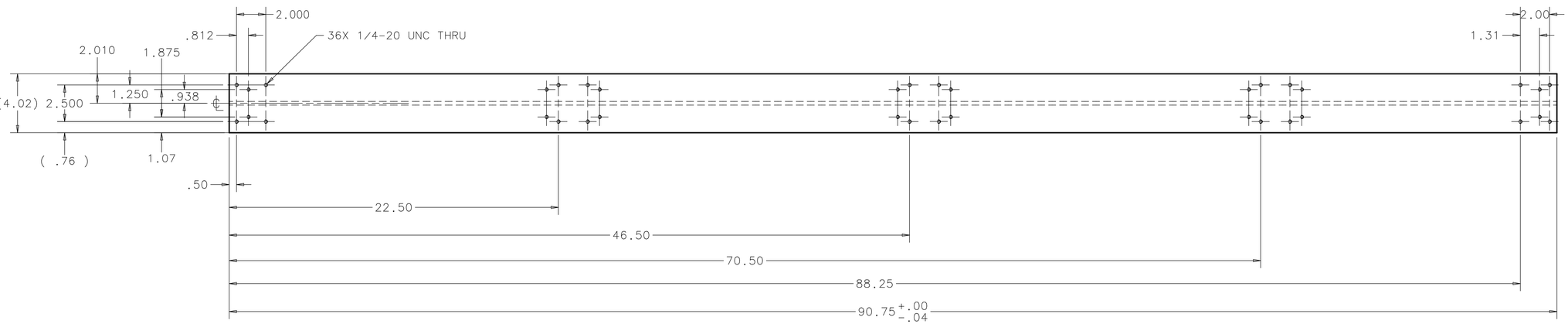

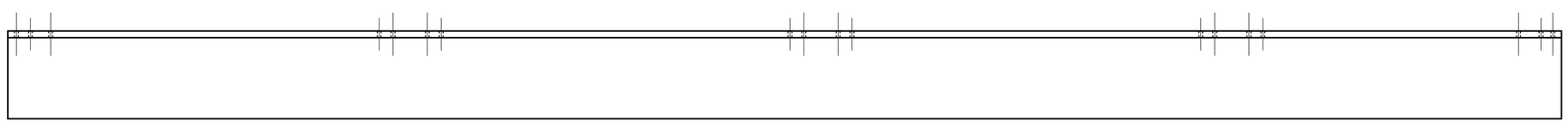

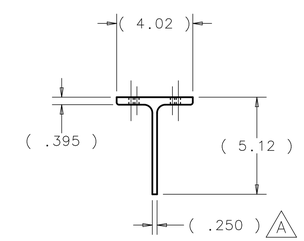

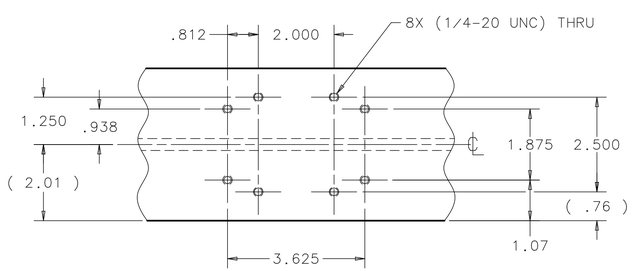

HOLE PATTERN

SCALE= 1:2

3X

UNLESS OTHERWISE SPECIFIED			ORIGINATOR	E.CHI	07-JUN-2006
.XX	.XXX	ANGLES	DRAWN	P.POLL	24-AUG-2006
± .02	± .005	± ---	CHECKED	J.RAUCH	14-SEP-2006
			APPROVED	E.CHI	14-SEP-2006

1. BREAK ALL SHARP EDGES .015 MAX.
2. DO NOT SCALE DRAWING.
3. DIMENSIONS BASED UPON ASME Y14.5M-1994
4. MAX. ALL MACH. SURFACES 125
5. DRAWING UNITS: U.S. INCH

USED ON: MD-444042

MATERIAL: ASTM-A36 STEEL TEE, WT5 x 9.5

FERMI NATIONAL ACCELERATOR LABORATORY
UNITED STATES DEPARTMENT OF ENERGY

SCIBOONE - MECHANICAL DETECTORS DARKRM TOP TEE DETAIL

SCALE	DRAWING NUMBER	SHEET	REV
1:4 & NOTED	3954.330-MD-444043	1 OF 1	A

CREATED WITH : Ideas12NXSeries | GROUP: PPD/MECHANICAL DEPARTMENT

Created: 11:26:28 on 20-10-06 (D-M-Y) By: sperry State: 1-INITIAL