REV	DESCRIPTION	DRAWN	DATE
		APPROVED	DATE

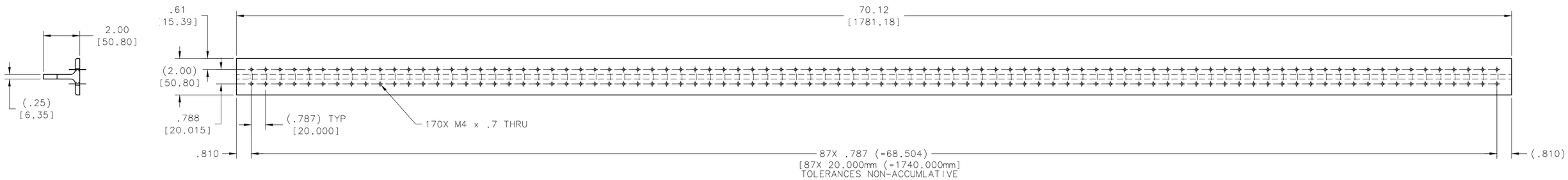

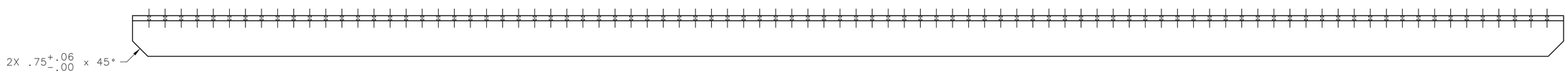

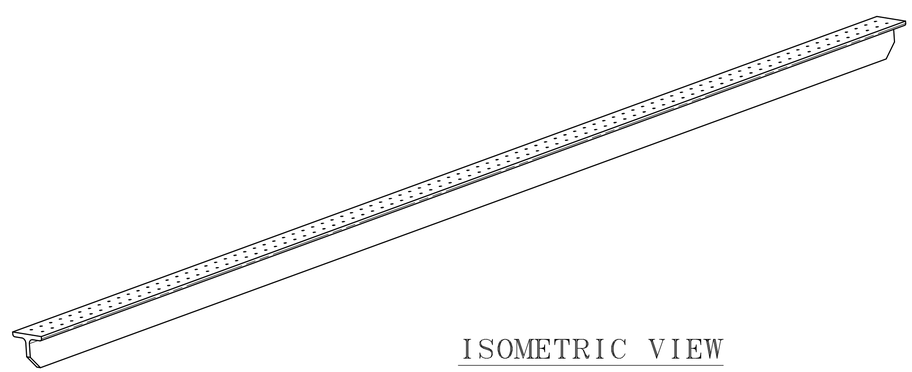

ISOMETRIC VIEW

NOTES:

1. APPROX WEIGHT: 6.50 LBS
2. ALL DIMENSIONS ARE IN INCHES UNLESS OTHERWISE NOTED. REFERENCE DIMENSIONS IN BRACKETS, IF SHOWN, ARE IN MILLIMETERS.

NOTICE: IMAGE OBTAINED FROM FERMILAB WEB SITE

This information is provided for REFERENCE use only. Not for MANUFACTURE, or DESIGN INFORMATION. All information contained in this document represents work sponsored by an agency of the U.S. Government. Neither the U.S. Government nor any agency thereof, nor Universities Research Association, Inc., nor any of their employees or officers, makes any warranty, express or implied, or assumes any legal liability or responsibility for the accuracy, completeness, or usefulness of any information, apparatus, product or process disclosed, or represents that its use would not infringe privately owned rights.

UNLESS OTHERWISE SPECIFIED			ORIGINATOR	E.CHI	07-JUN-2006
.XX	.XX	ANGLES	DRAWN	T.SPERRY	07-JUN-2006
± .02	± .005	± - -	CHECKED	J.RAUCH	08-NOV-2006
			APPROVED	E.CHI	08-NOV-2006

1. BREAK ALL SHARP EDGES .015 MAX.
2. DO NOT SCALE DRAWING.
3. DIMENSIONS BASED UPON ASME Y14.5M-1994
4. MAX. ALL MACH. SURFACES 125
5. DRAWING UNITS: U.S. INCH

USED ON: MD-435915

MATERIAL: ALUMINUM TEE, EXTRUDED, 6061-T6, 2 x 2 x 1/4 THK

FERMI NATIONAL ACCELERATOR LABORATORY
UNITED STATES DEPARTMENT OF ENERGY

SCIBOONE - MECHANICAL DETECTORS TEE ALUM PMT TOP SCIBAR

SCALE	DRAWING NUMBER	SHEET	REV
3/8 & AS NOTED	3954.330-MD-435842	1 OF 1	

CREATED WITH : Ideas12NXSeries | GROUP: PPD/MECHANICAL DEPARTMENT