REV	DESCRIPTION	DRAWN	DATE
		APPROVED	DATE

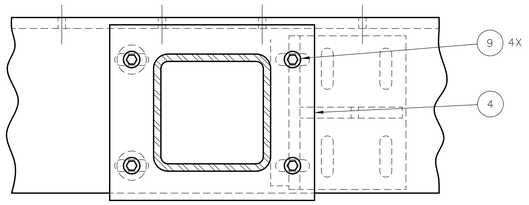

SECTION D-D
TYP 6 PLACES
SCALE: 1/2

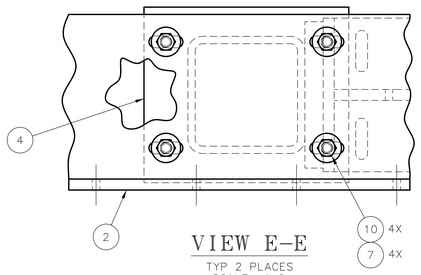

VIEW E-E
TYP 2 PLACES
SCALE: 1/2

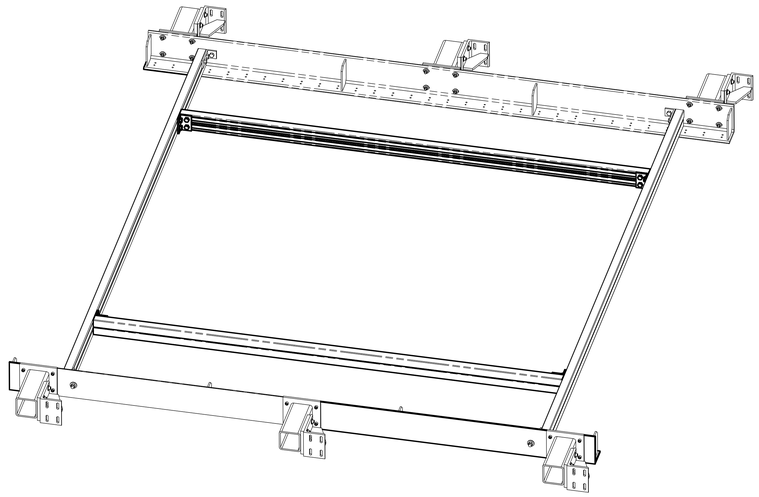

ISOMETRIC VIEW
SCALE: 3/32

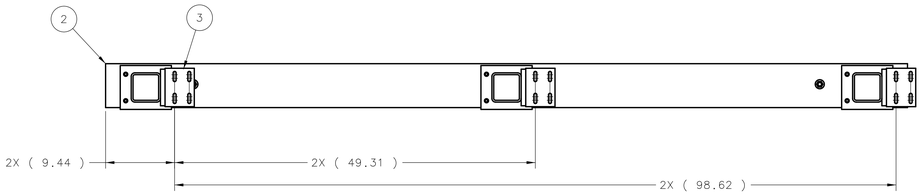

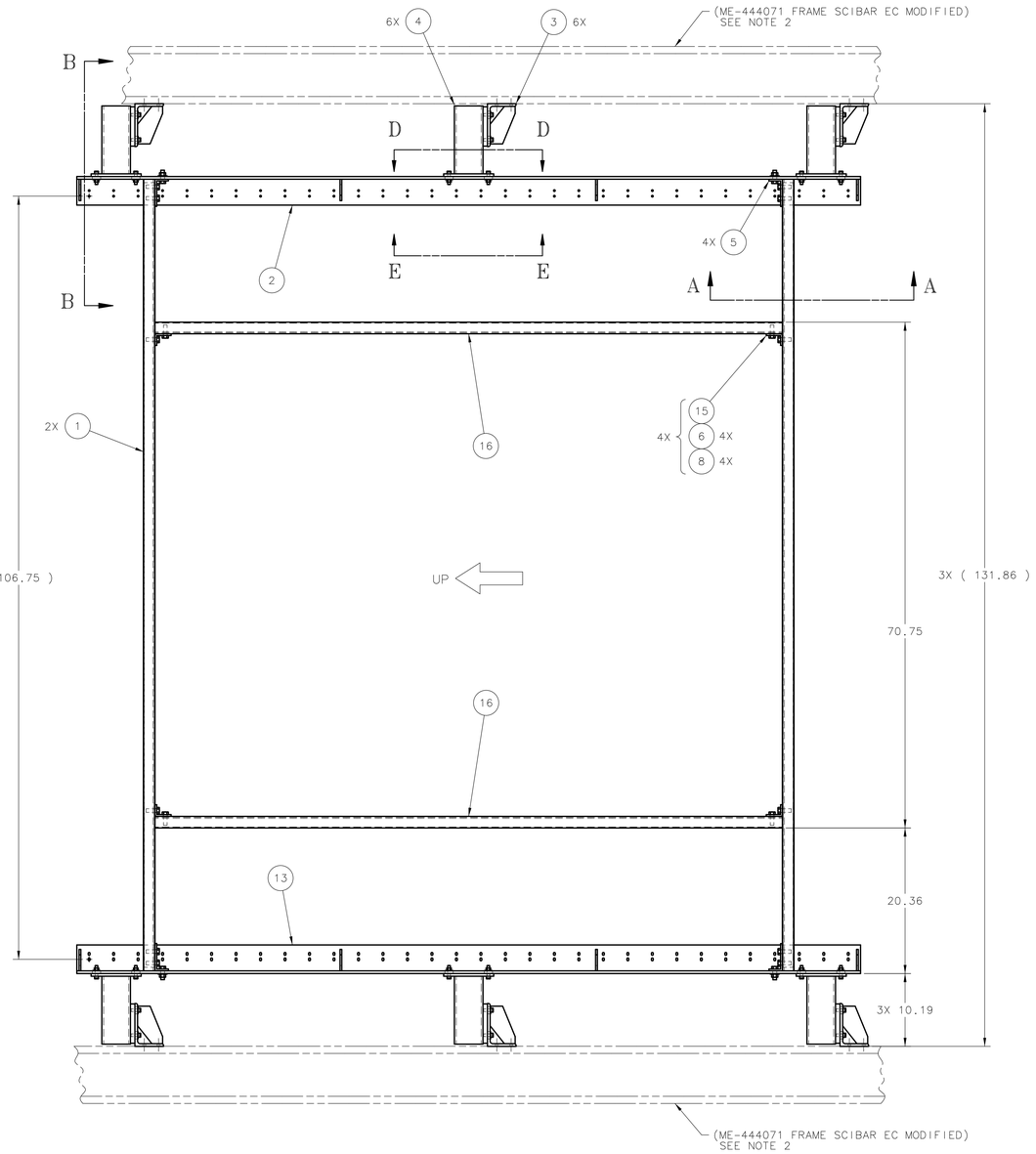

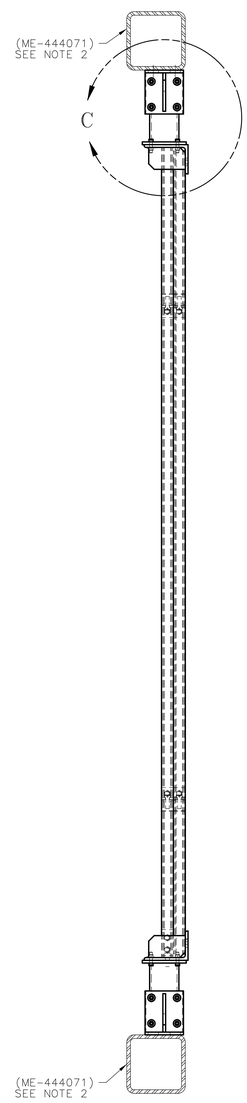

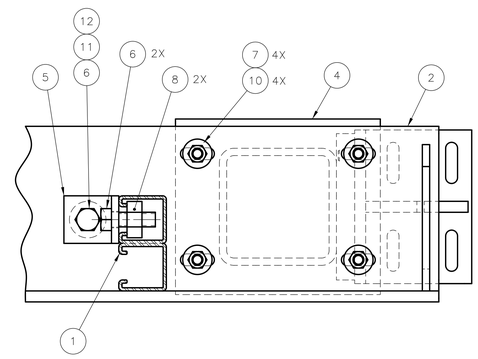

SECTION A-A
TYP 4 PLACES
SCALE: 1/2

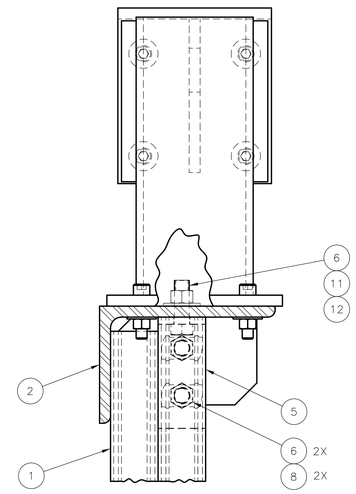

SECTION B-B
TYP 4 PLACES
SCALE: 1/2

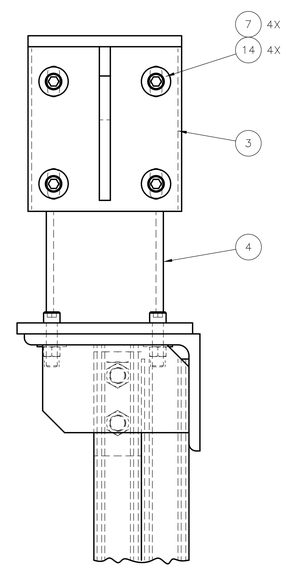

DETAIL C
TYP 6 PLACES
SCALE: 1/2

ITEM	PART NO.	DESCRIPTION OR SIZE	QTY.
16	COML	CHANNEL, FRAMING, GREEN FINISH, 87.75" LG, UNISTRUT P/N P1001A OR B-LINE B24B	2
15	COML	CHANNEL FITTING, ANGLE, GREEN FINISH, 4 HOLE, UNISTRUT #P1934	4
14	COML	SCREW, CAP, SOCKET HD, ALLOY STL, BLK FINISH, 3/8-16 x 1 LG, McMASTER-CARR P/N 91251A624	24
13	MD-444103	WELDMENT ANGLE SUPT HZ EC SLOT	1
12	1210-0740	NUT, HEX, FULL, TYPE 18-8 S.S., SIZE 1/2-13	4
11	1218-0700	WASHER, FLAT, TYPE 18-8 S.S., SIZE 1/2	4
10	COML	NUT, HEX, FULL, SIZE 3/8-16, BLK OXIDE GRADE 5 STL, McMASTER-CARR P/N 95479A118	24
9	COML	SCREW, CAP, SOCKET HD, ALLOY STL, BLK FINISH, 3/8-16 x 1-1/2 LG, McMASTER-CARR P/N 91251A628	24
8	1240-1570	NUT, CHANNEL, SIZE 1/2-13UNC, B-LINE TWIRL NUT P/N TN-225	24
7	COML	WASHER, FLAT, SAE, SCREW SIZE 3/8, McMASTER-CARR P/N 98180A130	48
6	1226-0635	SCREW, CAP, HEX HD, TYPE 18-8 S.S., CLASS-2A THD, 1/2-13UNC x 1-1/2	28
5	COML	CHANNEL FITTING, ANGLE, GREEN FINISH, UNISTRUT #P1346 OR B-LINE #B232	4
4	MC-435930	BRKT TUBE WELDMENT EC	6
3	MC-435964	EC HORIZ ANGLE WELDMENT	6
2	MD-435967	HORIZ EC SUPP ANGLE WELDMENT	1
1	MD-435936	CHANNEL FRAME SUPPORT HORIZ	2

PARTS LIST

UNLESS OTHERWISE SPECIFIED			ORIGINATOR	E.CHI	07-JUN-2006
.XX	.XXX	ANGLES	DRAWN	T.SPERRY	19-JUL-2006
± .06	± - -	± - -	CHECKED	J.RAUCH	11-OCT-2006
1. BREAK ALL SHARP EDGES MAX.			APPROVED	E.CHI	11-OCT-2006
2. DO NOT SCALE DRAWING. 3. DIMENSIONS BASED UPON ASME Y14.5M-1994 4. MAX. ALL MACH. SURFACES			USED ON		
5. DRAWING UNITS: U.S. INCH			MATERIAL SEE PARTS LIST ABOVE		

FERMI NATIONAL ACCELERATOR LABORATORY
UNITED STATES DEPARTMENT OF ENERGY

SCIBOONE - MECHANICAL DETECTORS FRAME SUPPORT HORIZ EC

SCALE	DRAWING NUMBER	SHEET	REV
1/8 & AS NOTED	3954.330-ME-435931	1 OF 1	

CREATED WITH : Ideas12NXSeries GROUP: PPD/MECHANICAL DEPARTMENT

NOTICE: IMAGE OBTAINED FROM FERMILAB WEB SITE
This information is provided for REFERENCE use only. Not for MANUFACTURE, or DESIGN INFORMATION. All information contained in this document represents work sponsored by an agency of the U.S. Government. Neither the U.S. Government nor any agency thereof, nor Universities Research Association, Inc., nor any of their employees or officers, makes any warranty, express or implied, or assumes any legal liability or responsibility for the accuracy, completeness, or usefulness of any information, apparatus, product or process disclosed, or represents that its use would not infringe privately owned rights.

NOTES:

1. THE EC HORIZONTAL SUPPORT FRAME (ME-435931) IS PART OF THE HORIZONTAL EC INSTALLATION (ME-435969). REFER TO HORIZONTAL EC INSTALLATION (ME-435969) FOR LOCATIONS AND OTHER DETAILS.
2. DIRECTLY INSTALL THE PARTS OF THE HORIZONTAL EC FRAME SUPPORT ONTO THE SCIBAR EC MODIFIED FRAME (ME-444071).
3. APPROX WEIGHT: 450 LBS