REV	DESCRIPTION	DRAWN	DATE
		APPROVED	DATE

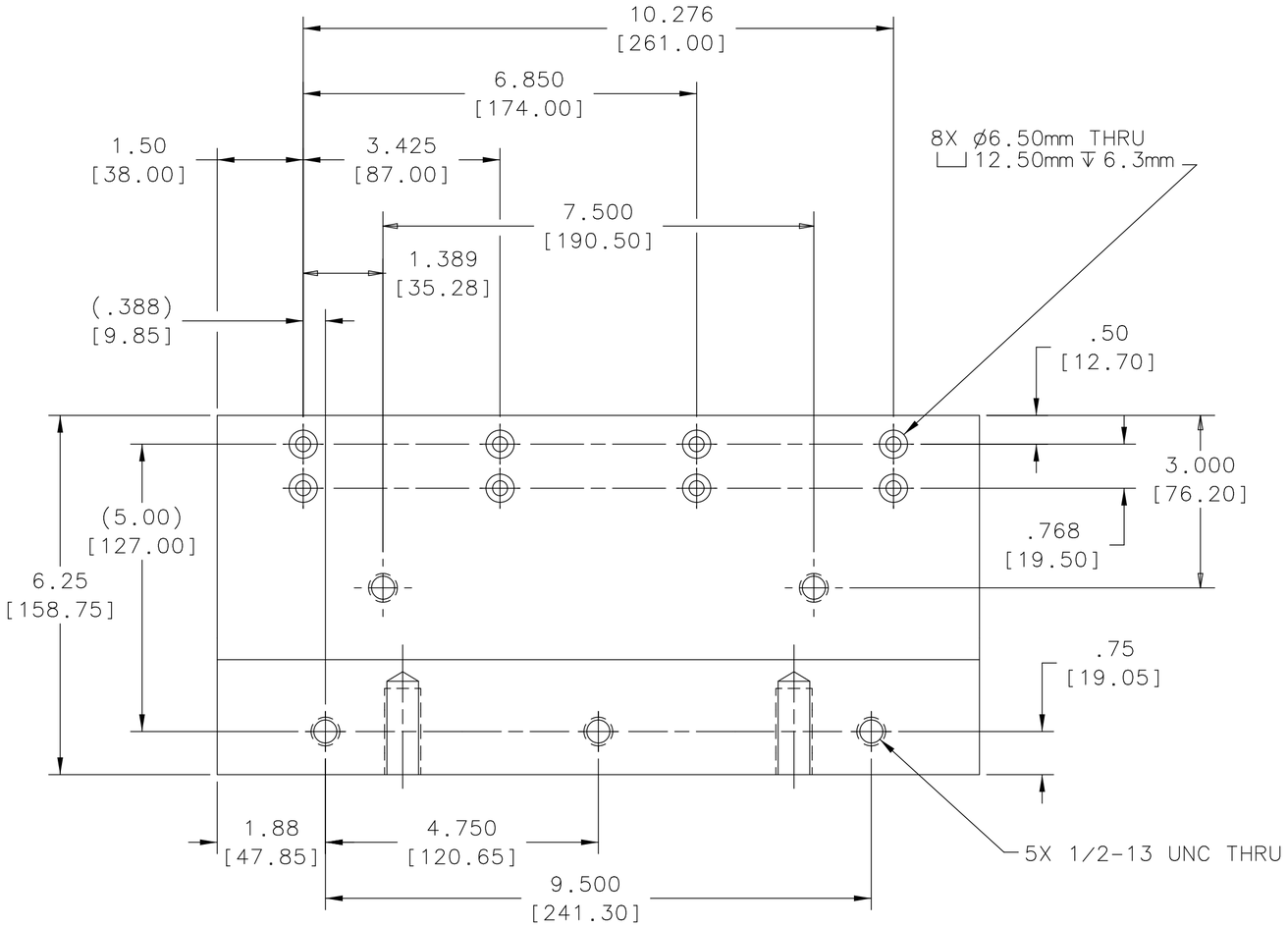

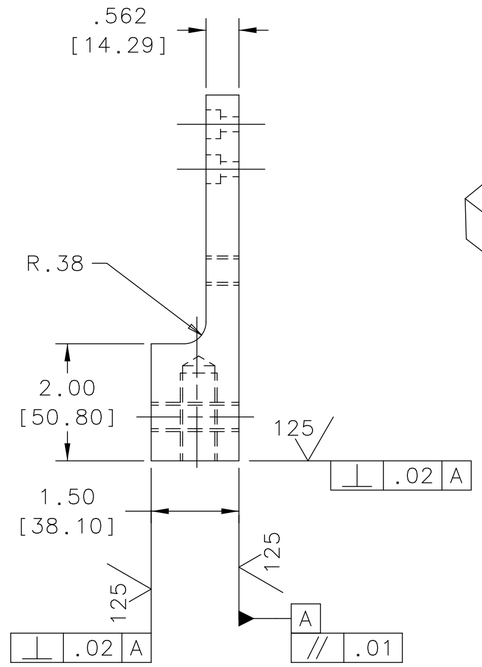

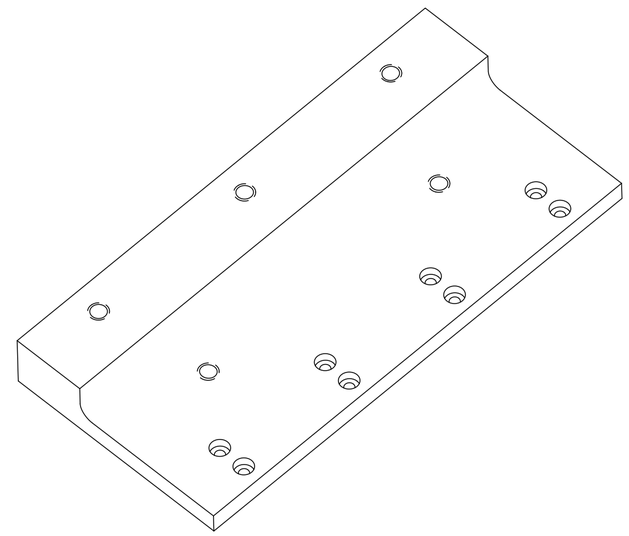

ISOMETRIC VIEW

SCALE: 3/8

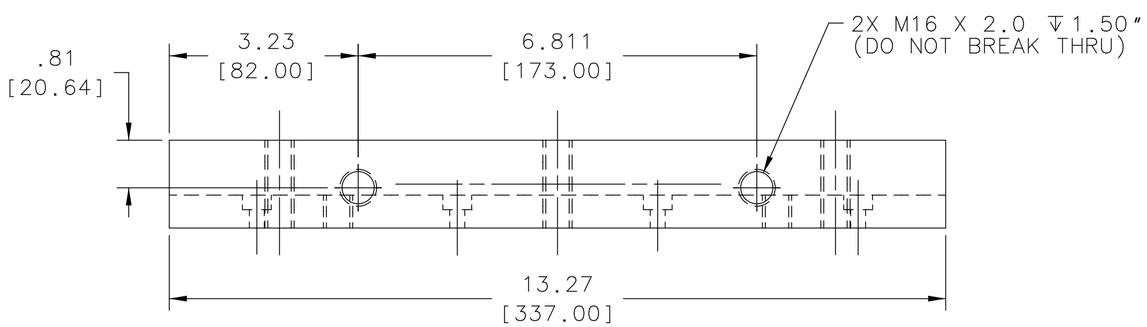

NOTES:

1. APPROX WEIGHT: 18.19 LBS
2. ALL DIMENSIONS IN INCHES UNLESS OTHERWISE SPECIFIED. REFERENCE DIMENSIONS IN BRACKETS, IF SHOWN, ARE IN MILLIMETERS.

NOTICE: IMAGE OBTAINED FROM FERMILAB WEB SITE

This information is provided for REFERENCE use only. Not for MANUFACTURE, or DESIGN INFORMATION. All information contained in this document represents work sponsored by an agency of the U.S. Government. Neither the U.S. Government nor any agency thereof, nor Universities Research Association, Inc., nor any of their employees or officers, makes any warranty, express or implied, or assumes any legal liability or responsibility for the accuracy, completeness, or usefulness of any information, apparatus, product or process disclosed, or represents that its use would not infringe privately owned rights.

UNLESS OTHERWISE SPECIFIED			ORIGINATOR	E.CHI	07-JUN-2006
.XX	.XXX	ANGLES	DRAWN	T.SPERRY	24-JUL-2006
± .02	± .005	± - -	CHECKED	J.RAUCH	02-NOV-2006
			APPROVED	E.CHI	02-NOV-2006

1. BREAK ALL SHARP EDGES .015 MAX.
2. DO NOT SCALE DRAWING.
3. DIMENSIONS BASED UPON ASME Y14.5M-1994
4. MAX. ALL MACH. SURFACES 250
5. DRAWING UNITS: U.S. INCH

USED ON: ME-435975

MATERIAL: STEEL PLATE, 1-3/4 THK, ASTM A36 OR EQUIVALENT

FERMI NATIONAL ACCELERATOR LABORATORY
UNITED STATES DEPARTMENT OF ENERGY

SCIBOONE - MECHANICAL DETECTORS
PLATE MOD SUPER VERT TOP EC

SCALE	DRAWING NUMBER	SHEET	REV
1/2 & AS NOTED	3954.330-MC-435946	1 OF 1	

CREATED WITH : Ideas12NXSeries | GROUP: PPD/MECHANICAL DEPARTMENT