| REV | DESCRIPTION | DRAWN | DATE |
|---|---|---|---|
| | | APPROVED | DATE |

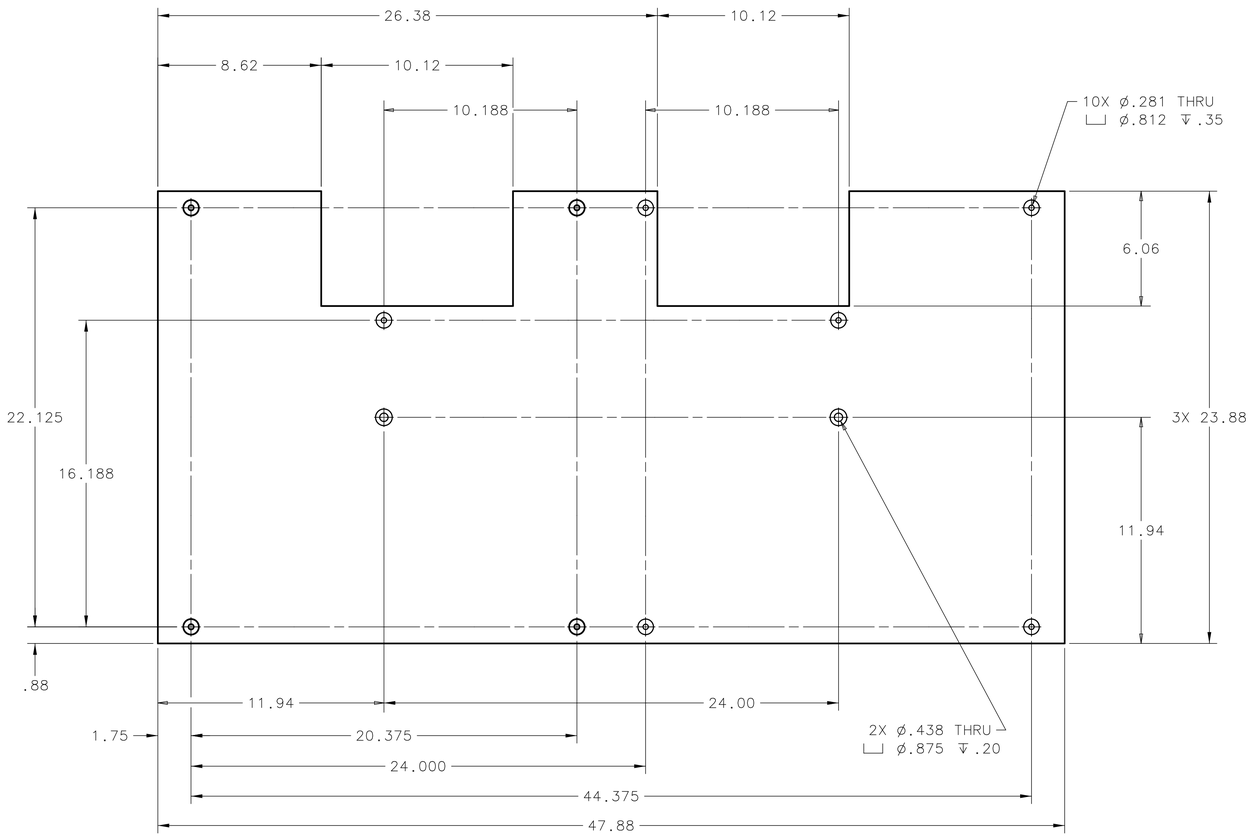


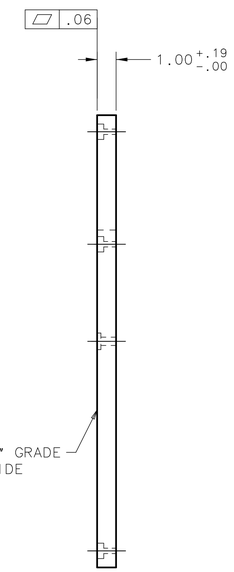


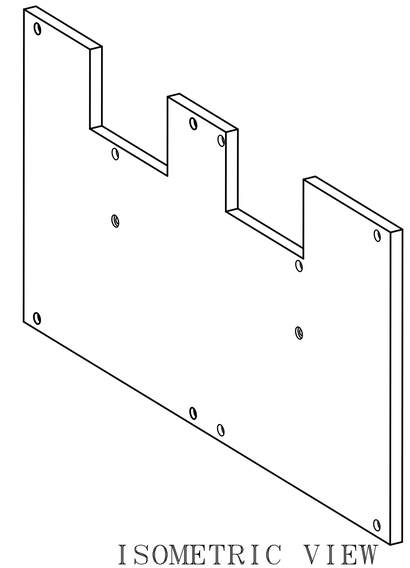

ISOMETRIC VIEW

NOTE
FINISH ALL SIDES WITH PAINT,
WATER BASE, FLAT, FIRE RETARDANT,
BLACK

| UNLESS OTHERWISE SPECIFIED | | | ORIGINATOR | E.CHI | 07-JUN-2006 |
|---|---|---|---|---|---|
| .XX | .XXX | ANGLES | DRAWN | P.POLL | 26-AUG-2006 |
| ± .02 | ± .010 | ± --- | CHECKED | J.RAUCH | 14-SEP-2006 |
| 1. BREAK ALL SHARP EDGES MAX. | | | APPROVED | E.CHI | 14-SEP-2006 |
| 2. DO NOT SCALE DRAWING. 3. DIMENSIONS BASED UPON ASME Y14.5M-1994 4. MAX. ALL MACH. SURFACES 500 | | | USED ON | MC-444051 | |
| 5. DRAWING UNITS: U.S. INCH | | | MATERIAL | PLYWOOD, APA RATED "STURD-I-FLOOR" OR EQUIV., BC GRADE OR BETTER | |

FERMI NATIONAL ACCELERATOR LABORATORY
UNITED STATES DEPARTMENT OF ENERGY

# SCIBOONE - MECHANICAL DETECTORS
# DARKRM TOP PLYWOOD C, 24 X 48

| SCALE | DRAWING NUMBER | SHEET | REV |
|---|---|---|---|
| 1:4 | 3954.330-MD-444046 | 1 OF 1 | |

CREATED WITH : Ideas12NXSeries | GROUP: PPD/MECHANICAL DEPARTMENT


NOTICE: IMAGE OBTAINED FROM FERMILAB WEB SITE

This information is provided for REFERENCE use only. Not for MANUFACTURE, or DESIGN INFORMATION. All information contained in this document represents work sponsored by an agency of the U.S. Government. Neither the U.S. Government nor any agency thereof, nor Universities Research Association, Inc., nor any of their employees or officers, makes any warranty, express or implied, or assumes any legal liability or responsibility for the accuracy, completeness, or usefulness of any information, apparatus, product or process disclosed, or represents that its use would not infringe privately owned rights.