REV	DESCRIPTION	DRAWN	DATE
		APPROVED	DATE

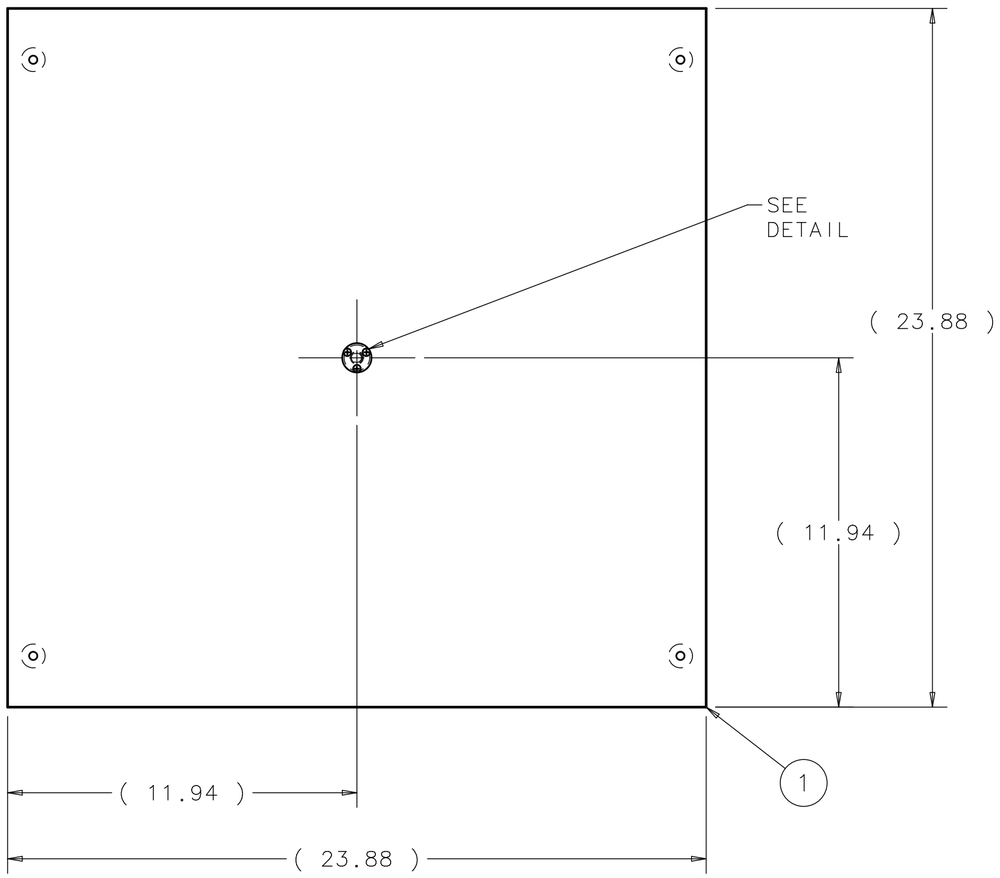

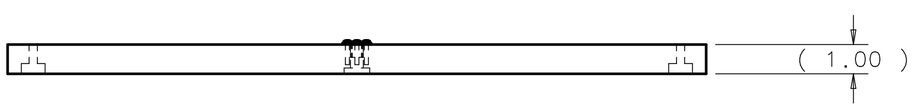

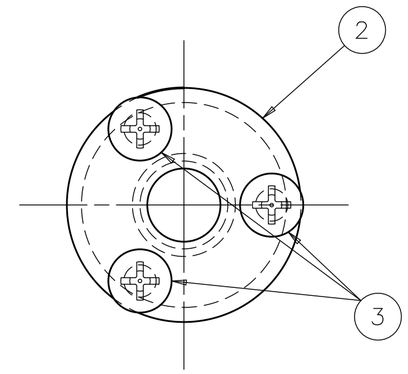

DETAIL VIEW
SCALE= 2:1

ITEM	PART NO.	DESCRIPTION OR SIZE	QTY.
3	COML.	WOOD SCREW, #6 x 3/4" LG., PHILLIPS RD.HD., SST	3
2	COML.	WELD NUT, 3/8-16 UNC, RD. BASE, STL., McMASTER-CARR #90611A450	1
1	MC-444044	PLYWOOD A, 1 x 24 x 24	1

PARTS LIST

UNLESS OTHERWISE SPECIFIED			ORIGINATOR	E.CHI	07-JUN-2006
.XX	.XXX	ANGLES	DRAWN	P.POLL	30-AUG-2006
± .02	± ---	± ---	CHECKED	J.RAUCH	11-SEP-2006
			APPROVED	E.CHI	14-SEP-2006

1. BREAK ALL SHARP EDGES MAX.
2. DO NOT SCALE DRAWING.
3. DIMENSIONS BASED UPON ASME Y14.5M-1994
4. MAX. ALL MACH. SURFACES √
5. DRAWING UNITS: U.S. INCH

USED ON: ME-444076

MATERIAL: SEE PARTS LIST ABOVE

FERMI NATIONAL ACCELERATOR LABORATORY
UNITED STATES DEPARTMENT OF ENERGY

SCIBOONE - MECHANICAL DETECTORS
DARKRM TOP PLYWOOD A WELD NUT

SCALE	DRAWING NUMBER	SHEET	REV
1:4 & NOTED	3954.330-MC-444049	1 OF 1	

CREATED WITH : Ideas12NXSeries | GROUP: PPD/MECHANICAL DEPARTMENT

NOTICE: IMAGE OBTAINED FROM FERMILAB WEB SITE

This information is provided for REFERENCE use only. Not for MANUFACTURE, or DESIGN INFORMATION. All information contained in this document represents work sponsored by an agency of the U.S. Government. Neither the U.S. Government nor any agency thereof, nor Universities Research Association, Inc., nor any of their employees or officers, makes any warranty, express or implied, or assumes any legal liability or responsibility for the accuracy, completeness, or usefulness of any information, apparatus, product or process disclosed, or represents that its use would not infringe privately owned rights.