REV	DESCRIPTION	DRAWN	DATE
		APPROVED	DATE

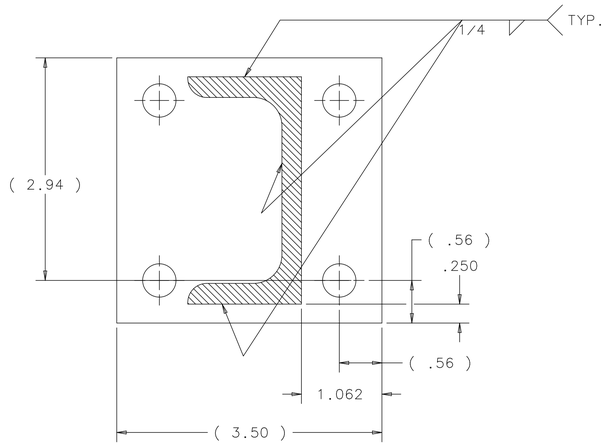

SECTION A-A
SCALE: FULL

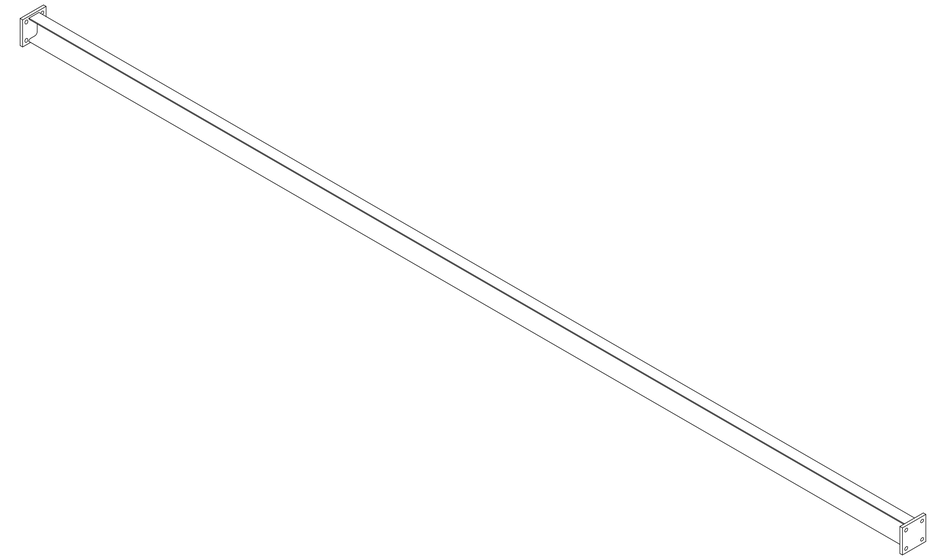

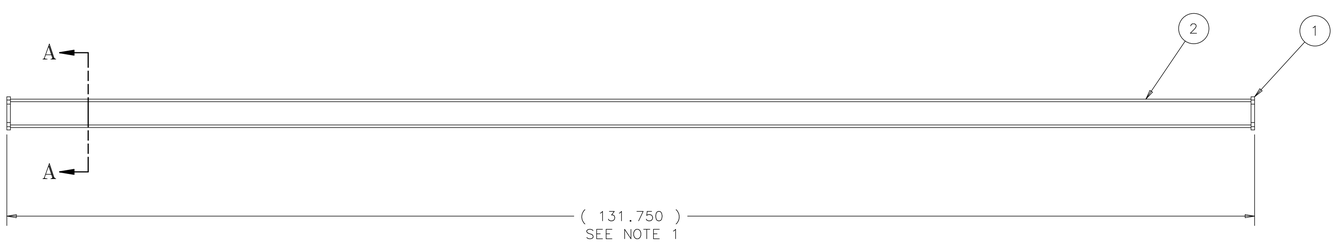

NOTES:

1. FIELD CONFIRMED TO BE MADE TO FIT.
2. PAINT WITH RED OXIDE DAMP-PROOF RUSTOLEUM PRIMER OR EQUIVALENT.
3. APPROXIMATE WEIGHT: 57.5 LBS.

NOTICE: IMAGE OBTAINED FROM FERMILAB WEB SITE

This information is provided for REFERENCE use only. Not for MANUFACTURE, or DESIGN INFORMATION. All information contained in this document represents work sponsored by an agency of the U.S. Government. Neither the U.S. Government nor any agency thereof, nor Universities Research Association, Inc., nor any of their employees or officers, makes any warranty, express or implied, or assumes any legal liability or responsibility for the accuracy, completeness, or usefulness of any information, apparatus, product or process disclosed, or represents that its use would not infringe privately owned rights.

ITEM	PART NO.	DESCRIPTION OR SIZE	QTY.
2	COML	CHANNEL, C3 x 5LBS x 131.00LG ASTM A36, SEE NOTE 1	1
1	MB-444141	END PLATE	2

PARTS LIST

UNLESS OTHERWISE SPECIFIED			ORIGINATOR	E.CHI	07-JUN-2006
.XX	.XXX	ANGLES	DRAWN	J.MATESKI	12-OCT-2006
± .06	± .015	± - -	CHECKED	J.RAUCH	17-OCT-2006
			APPROVED	E.CHI	17-OCT-2006

1. BREAK ALL SHARP EDGES .015 MAX.
2. DO NOT SCALE DRAWING.
3. DIMENSIONS BASED UPON ASME Y14.5M-1994
4. MAX. ALL MACH. SURFACES 250
5. DRAWING UNITS: U.S. INCH

USED ON

MATERIAL
SEE PARTS LIST ABOVE

FERMI NATIONAL ACCELERATOR LABORATORY
UNITED STATES DEPARTMENT OF ENERGY

SCIBOONE - MECHANICAL DETECTORS
SUPT CABLE ROUTE VT EC WELDMT

SCALE	DRAWING NUMBER	SHEET	REV
1:8 AS NOTED	3954.330-MD-444140	1 OF 1	

CREATED WITH : Ideas12NXSeries | GROUP: PPD/MECHANICAL DEPARTMENT