REV	DESCRIPTION	DRAWN	DATE
		APPROVED	DATE

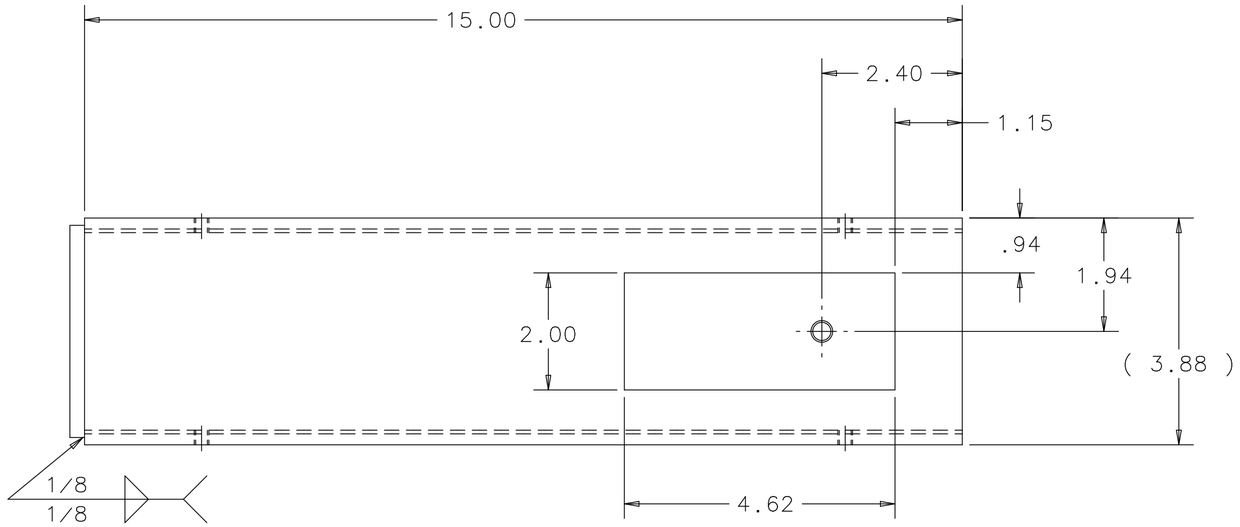

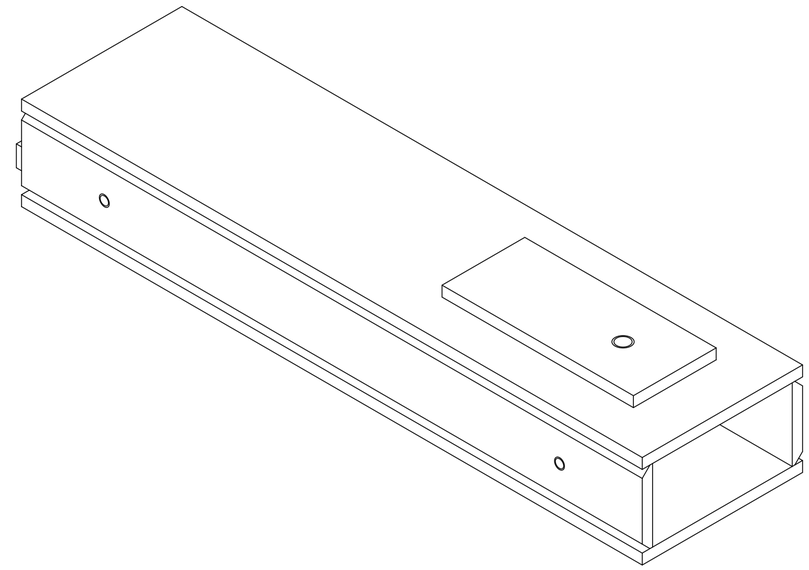

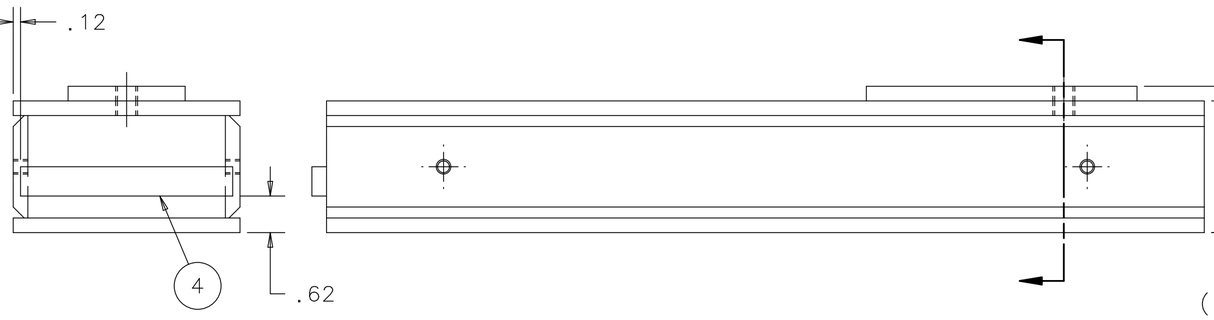

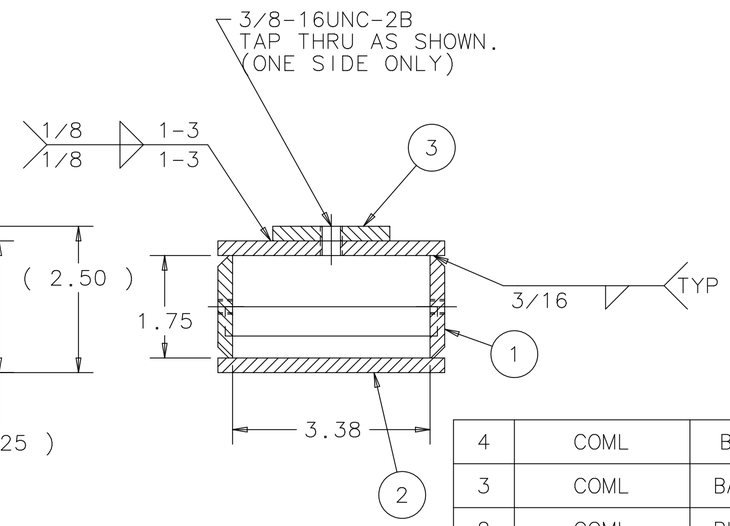

ITEM	PART NO.	DESCRIPTION OR SIZE	QTY.
4	COML	BAR 3.62 X .50 X .25 ASTM A36	1
3	COML	BAR 2.00 X 4.63 X .25 ASTM A36	1
2	COML	PLATE 15 X 3.88 X .25 ASTM A36	2
1	MD-444165	PLT VME 15 X 1.75 X .25	2

PARTS LIST

UNLESS OTHERWISE SPECIFIED			ORIGINATOR	E.CHI	07-JUN-2006
.XX	.XXX	ANGLES	DRAWN	J.MATESKI	25-OCT-2006
± .02	± - -	± - -	CHECKED	J.RAUCH	01-NOV-2006
			APPROVED	E.CHI	01-NOV-2006

1. BREAK ALL SHARP EDGES .015 MAX.
2. DO NOT SCALE DRAWING.
3. DIMENSIONS BASED UPON ASME Y14.5M-1994
4. MAX. ALL MACH. SURFACES 125
5. DRAWING UNITS: U.S. INCH

USED ON

MATERIAL
SEE PARTS LIST ABOVE

FERMI NATIONAL ACCELERATOR LABORATORY
UNITED STATES DEPARTMENT OF ENERGY

SCIBOONE - MECHANICAL DETECTORS RACK VME MOUNT WELDMENT

SCALE	DRAWING NUMBER	SHEET	REV
1:2	3954.330-MC-444171	1 OF 1	

CREATED WITH : Ideas12NXSeries | GROUP: PPD/MECHANICAL DEPARTMENT

NOTES:

1. ALL WELDMENTS MUST BE IN ACCORDANCE WITH STRUCTURAL WELDING CODE - AWS D1.1.
2. ALL WELD FILLER METALS ARE E70XX UNLESS OTHERWISE SPECIFIED.
3. APPROXIMATE WEIGHT: 12.4 LBS.
4. PAINT WITH RED OXIDE DAMP-PROOF RUST-OLEUM PRIMER OR EQUIVALENT EXCEPT FOR ALL HOLES.

NOTICE: IMAGE OBTAINED FROM FERMILAB WEB SITE

This information is provided for REFERENCE use only. Not for MANUFACTURE, or DESIGN INFORMATION. All information contained in this document represents work sponsored by an agency of the U.S. Government. Neither the U.S. Government nor any agency thereof, nor Universities Research Association, Inc., nor any of their employees or officers, makes any warranty, express or implied, or assumes any legal liability or responsibility for the accuracy, completeness, or usefulness of any information, apparatus, product or process disclosed, or represents that its use would not infringe privately owned rights.