REV	DESCRIPTION	DRAWN	DATE
		APPROVED	DATE

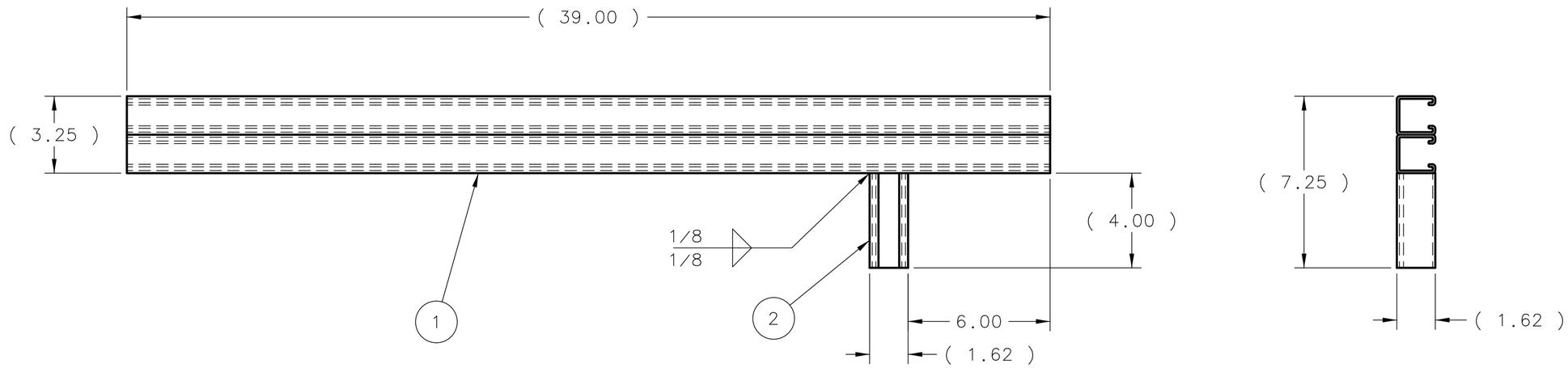

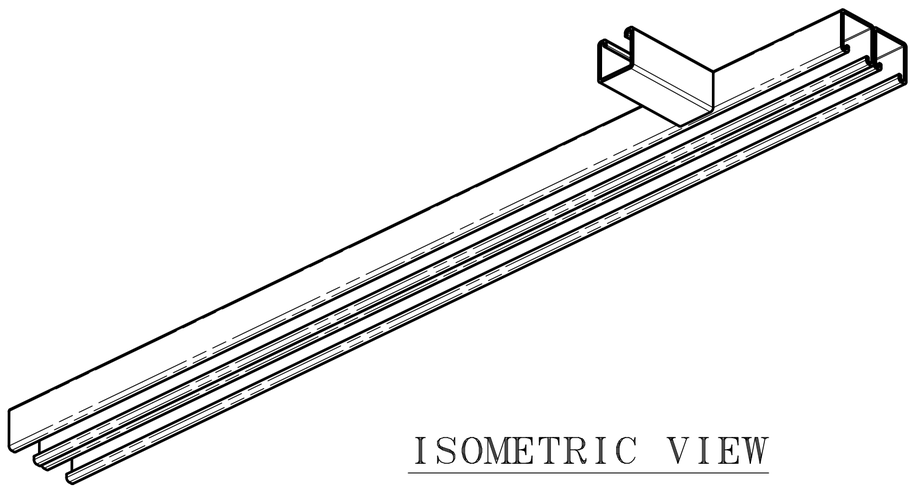

ISOMETRIC VIEW

ITEM	PART NO.	DESCRIPTION OR SIZE	QTY.
2	1243-1010	CHANNEL, GRN FINISH, B-LINE P/N B22 OR UNISTRUT P1000, 1-5/8" HIGH x 1-5/8" WD x 4.00 LG	1
1	COML	CHANNEL, GRN FINISH, B-LINE P/N B22B OR UNISTRUT P1001A, 1-5/8" HIGH x 3-1/4" WD x 39.00 LG	1

PARTS LIST

UNLESS OTHERWISE SPECIFIED			ORIGINATOR	E.CHI	07-JUN-2006
.XX	.XXX	ANGLES	DRAWN	T.SPERRY	14-NOV-2006
± .03	± - -	± - -	CHECKED	J.RAUCH	12-DEC-2006
			APPROVED	E.CHI	12-DEC-2006

1. BREAK ALL SHARP EDGES .015 MAX.
2. DO NOT SCALE DRAWING.
3. DIMENSIONS BASED UPON ASME Y14.5M-1994
4. MAX. ALL MACH. SURFACES 250
5. DRAWING UNITS: U.S. INCH

USED ON: ME-444309

MATERIAL: SEE PARTS LIST ABOVE

FERMI NATIONAL ACCELERATOR LABORATORY
UNITED STATES DEPARTMENT OF ENERGY

SCIBOONE - MECHANICAL DETECTORS P1001A VME SUPPORT WELDMENT

SCALE	DRAWING NUMBER	SHEET	REV
1:4	3954.330-MC-444268	1 OF 1	

CREATED WITH : Ideas12NXSeries | GROUP: PPD/MECHANICAL DEPARTMENT

NOTES:

1. ALL WELDMENTS MUST BE IN ACCORDANCE WITH STRUCTURAL WELDING CODE - AWS D1.1.
2. ALL WELD FILLER MATERIALS ARE E70XX UNLESS OTHERWISE SPECIFIED.
3. APPROX WEIGHT: 13.5 LBS.

NOTICE: IMAGE OBTAINED FROM FERMILAB WEB SITE

This information is provided for REFERENCE use only. Not for MANUFACTURE, or DESIGN INFORMATION. All information contained in this document represents work sponsored by an agency of the U.S. Government. Neither the U.S. Government nor any agency thereof, nor Universities Research Association, Inc., nor any of their employees or officers, makes any warranty, express or implied, or assumes any legal liability or responsibility for the accuracy, completeness, or usefulness of any information, apparatus, product or process disclosed, or represents that its use would not infringe privately owned rights.