REV	DESCRIPTION	DRAWN	DATE
		APPROVED	DATE

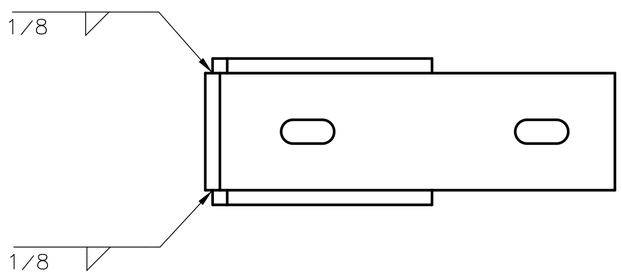

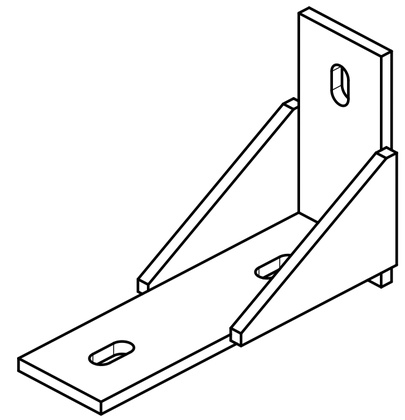

ISOMETRIC VIEW

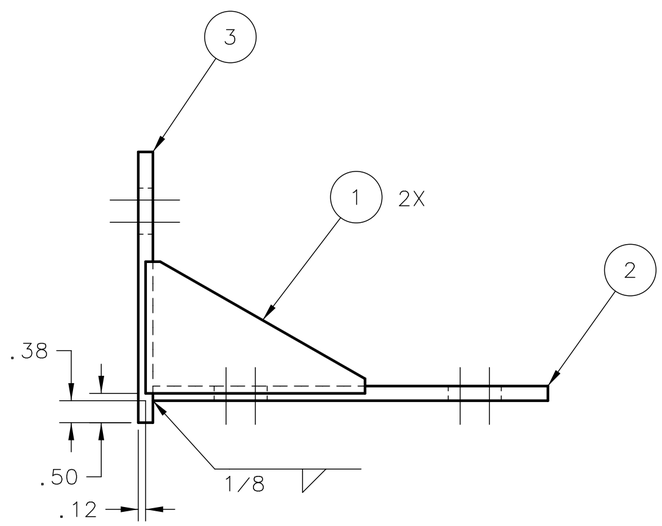

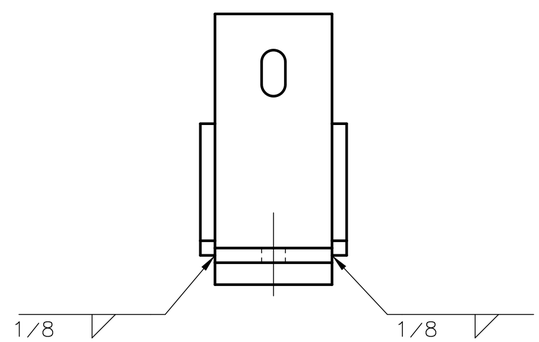

ITEM	PART NO.	DESCRIPTION OR SIZE	QTY.
3	MB-444287	PLATE VERTICAL BRKT SUPPORT	1
2	MB-444286	PLATE HORIZ BRKT SUPPORT	1
1	MB-444285	GUSSET BRACKET SUPPORT	2

PARTS LIST

UNLESS OTHERWISE SPECIFIED			ORIGINATOR	E.CHI	07-JUN-2006
.XX	.XXX	ANGLES	DRAWN	T.SPERRY	17-NOV-2006
± .03	± - -	± - -	CHECKED	J.RAUCH	12-DEC-2006
			APPROVED	E.CHI	12-DEC-2006

1. BREAK ALL SHARP EDGES MAX.
2. DO NOT SCALE DRAWING.
3. DIMENSIONS BASED UPON ASME Y14.5M-1994
4. MAX. ALL MACH. SURFACES √
5. DRAWING UNITS: U.S. INCH

USED ON: ME-444240

MATERIAL: SEE PARTS LIST ABOVE

FERMI NATIONAL ACCELERATOR LABORATORY
UNITED STATES DEPARTMENT OF ENERGY

SCIBOONE - MECHANICAL DETECTORS BRKT SUPPORT TUBE WELDMENT

SCALE	DRAWING NUMBER	SHEET	REV
1:2	3954.330-MC-444288	1 OF 1	

CREATED WITH : Ideas12NXSeries | GROUP: PPD/MECHANICAL DEPARTMENT

NOTES:

1. ALL WELDMENTS MUST BE IN ACCORDANCE WITH STRUCTURAL WELDING CODE - AWS D1.1.
2. ALL WELD FILLER METALS ARE E70XX UNLESS OTHERWISE SPECIFIED.
3. APPROX WEIGHT: 2.25 LBS.

NOTICE: IMAGE OBTAINED FROM FERMILAB WEB SITE

This information is provided for REFERENCE use only. Not for MANUFACTURE, or DESIGN INFORMATION. All information contained in this document represents work sponsored by an agency of the U.S. Government. Neither the U.S. Government nor any agency thereof, nor Universities Research Association, Inc., nor any of their employees or officers, makes any warranty, express or implied, or assumes any legal liability or responsibility for the accuracy, completeness, or usefulness of any information, apparatus, product or process disclosed, or represents that its use would not infringe privately owned rights.