REV	DESCRIPTION	DRAWN	DATE
		APPROVED	DATE

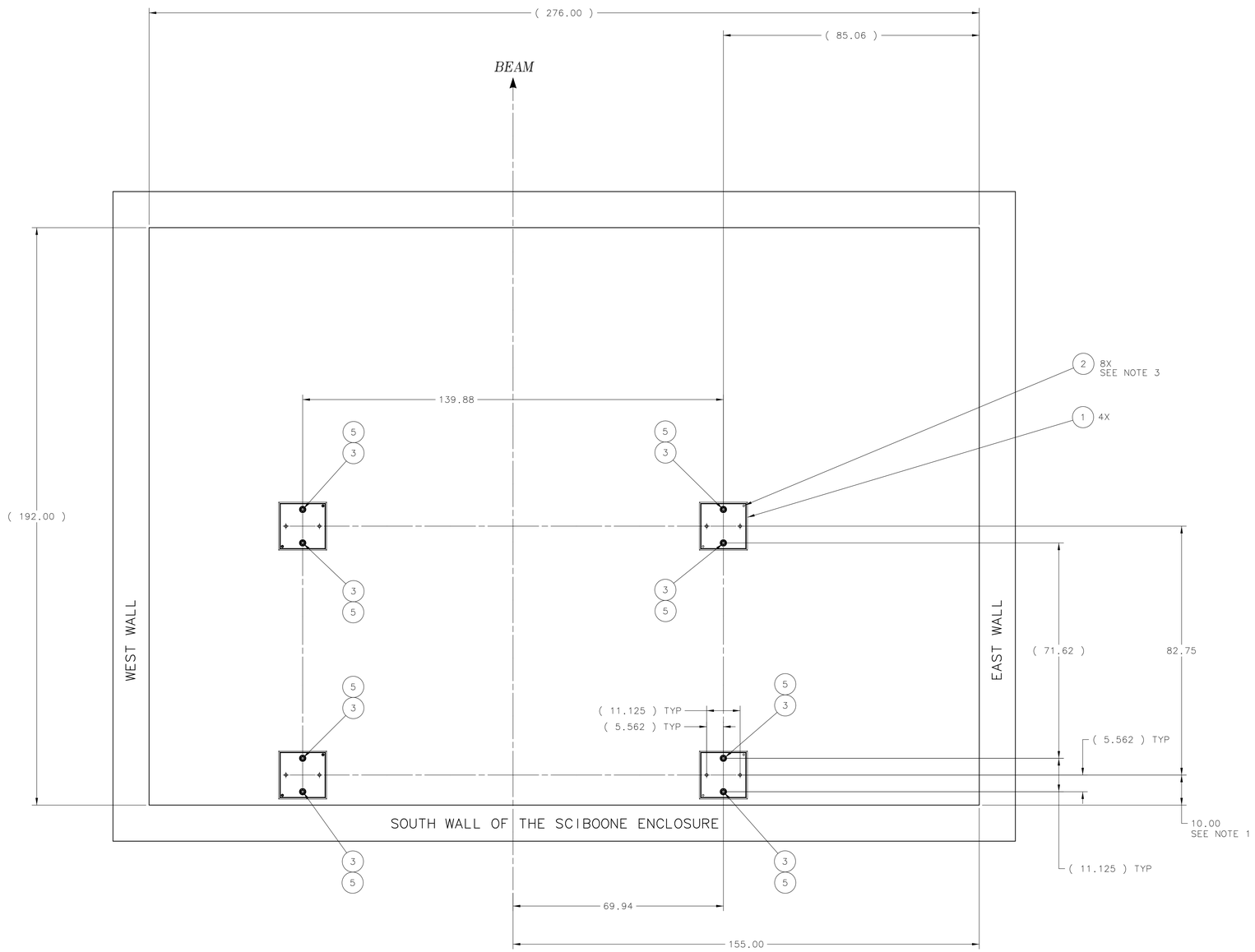

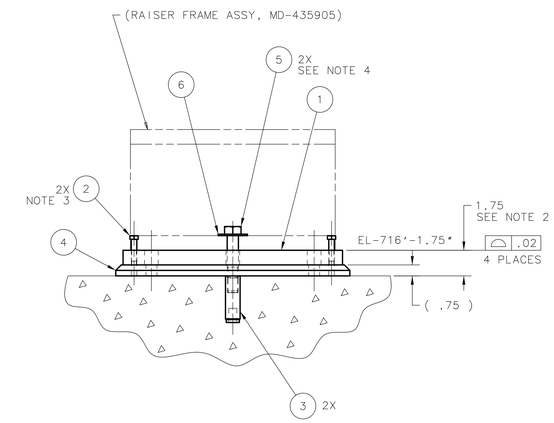

DETAIL A

TYPICAL 4 LOCATIONS
SCALE 1/4

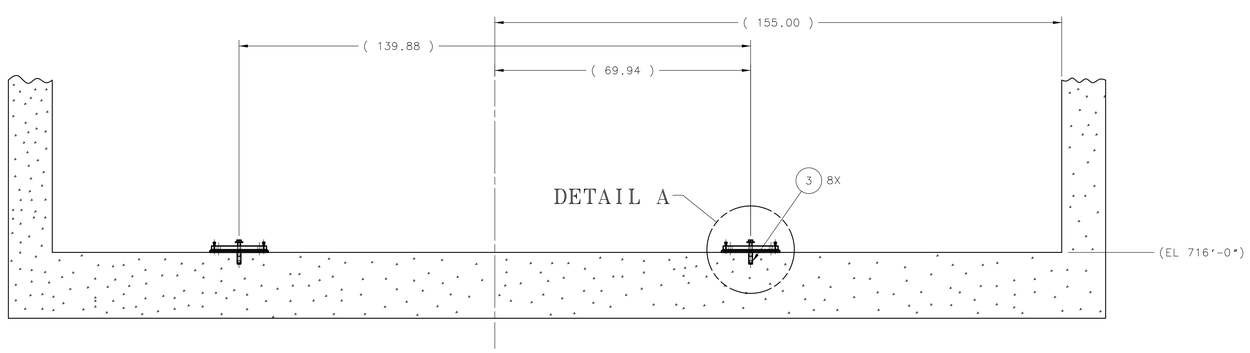

NOTES:

1. THIS DIMENSION MUST BE CONFIRMED WITH THE ENGINEER OR EXPERIMENT BEFORE INSTALLING ANCHORS, ITEM 3.
2. THE DIMENSION WILL BE BASED ON THE FIELD SURVEY DATA.
3. REMOVE ITEM 2, HEX HEAD SCREWS (QTY 8) USED FOR LEVELING, AFTER GROUT IS SET.
4. INSTALL HEX BOLTS, ITEM 5, PRIOR TO GROUTING. AT FINAL INSTALLATION, EACH ITEM 5 THREAD BEARING LENGTH INTO ANCHOR, ITEM 3, MUST BE 1" MINIMUM.

ITEM	PART NO.	DESCRIPTION OR SIZE	QTY.
6	COML	WASHER, FLAT, USS HIGH STRENGTH STEEL, 3/4 SIZE, McMASTER-CARR #98026A036 OR EQUIV	8
5	COML	BOLT, HEX HD, GRADE 5 STEEL, 3/4-10 x 4" LG, McMASTER-CARR #91247A851 OR EQUIV	8
4	COML	UNISORB V-100 STD EPOXY GROUT OR EQUIV	AS REQ'D
3	1204-1200	ANCHOR, FLUSH, DROP-IN TYPE, RED HEAD MULTI-SET II, ITW P/N RM-34 OR EQUIV, 3/4-10 BOLT SIZE	8
2	1226-0600	SCREW, CAP, HEX HD, TYPE 18-8 S.S., 3/8-16UNC-2A x 2-1/2" LG	8
1	MC-444357	PLATE BASE SCIBAR	4

PARTS LIST

UNLESS OTHERWISE SPECIFIED			ORIGINATOR	E.CHI	14-FEB-2007
.XX	.XXX	ANGLES	DRAWN	T.SPERRY	14-FEB-2007
± .03	± - -	± - -	CHECKED	J.RAUCH	02-MAR-2007
			APPROVED	E.CHI	02-MAR-2007

1. BREAK ALL SHARP EDGES MAX.
2. DO NOT SCALE DRAWING.
3. DIMENSIONS BASED UPON ASME Y14.5M-1994
4. MAX. ALL MACH. SURFACES √
5. DRAWING UNITS: U.S. INCH

USED ON

MATERIAL: SEE PARTS LIST ABOVE

FERMI NATIONAL ACCELERATOR LABORATORY
UNITED STATES DEPARTMENT OF ENERGY

SCIBOONE - MECHANICAL DETECTORS BASE INSTALLATION SCIBAR

SCALE	DRAWING NUMBER	SHEET	REV
1/16 & AS NOTED	3954.330-ME-444474	1 OF 1	

CREATED WITH : Ideas12NXSeries | GROUP: PPD/MECHANICAL DEPARTMENT

NOTICE: IMAGE OBTAINED FROM FERMILAB WEB SITE

This information is provided for REFERENCE use only. Not for MANUFACTURE, or DESIGN INFORMATION. All information contained in this document represents work sponsored by an agency of the U.S. Government. Neither the U.S. Government nor any agency thereof, nor Universities Research Association, Inc., nor any of their employees or officers, makes any warranty, express or implied, or assumes any legal liability or responsibility for the accuracy, completeness, or usefulness of any information, apparatus, product or process disclosed, or represents that its use would not infringe privately owned rights.