REV.	DESCRIPTION	DRAWN	DATE
		APPD.	DATE
A	1) WAS 1.25 DIA. 2) ADDED C'BORE 3) WAS .197-.200 4) WAS .315-.319	CLIFF PITTS	4-6-89

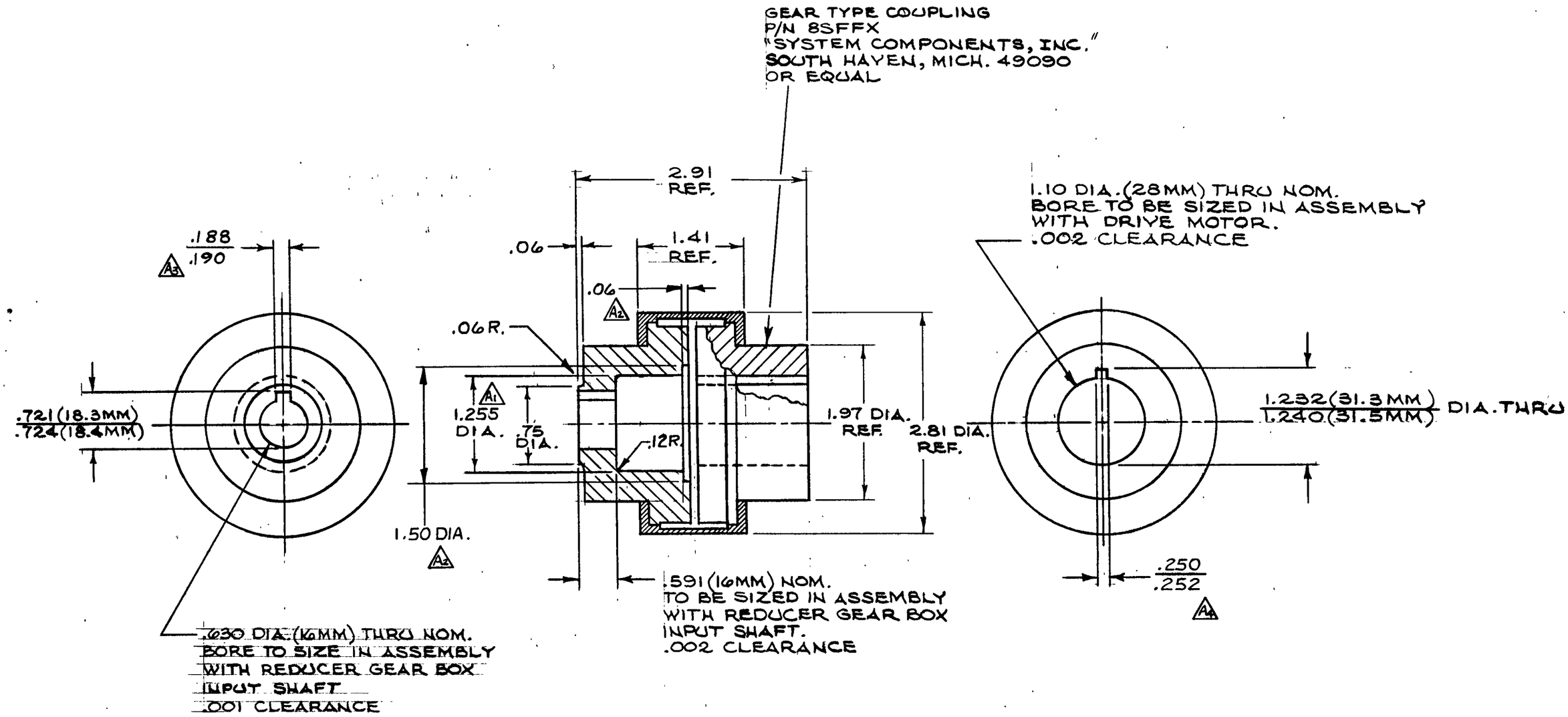

NOTE -

1. TOLERANCE:
   3 PLACE DECIMAL ±.005
   2 PLACE DECIMAL ±.010
   ANGLE ±1°
2. REFERENCE: TO BE ASSEMBLED TO GEAR REDUCER K66 LP143 B8A 14.05 AND MOTOR SMF-2-1500

ITEM NO.	PART NO.	DESCRIPTION OR SIZE	QTY. REQ.
PARTS LIST			

UNLESS OTHERWISE SPECIFIED			ORIGINATOR		
FRACTIONS	DECIMALS	ANGLES	DRAWN	M Miller	2-21-89
SEE NOTE			CHECKED	CLIFF PITTS	3-29-89
			APPROVED	J.F. LINDBERG	21 MAR 89

1. BREAK ALL SHARP EDGES 1/64 MAX.
2. DO NOT SCALE DWG.
3. DIMENSIONING IN ACCORD WITH ANSI Y14.5 STD's.

63 MAX. ALL MACHINED SURFACES

USED ON 9209.150-ME-272633

MATERIAL: REWORK VENDOR PRODUCT

FERMI NATIONAL ACCELERATOR LABORATORY
UNITED STATES DEPARTMENT OF ENERGY

E-740 DØ TEST
MOTOR/REDUCER COUPLING
TRANSLATION MOTION
RD/MECH. DEPT.

SCALE	FILMED	DRAWING NUMBER	REV.
1:1		9209.150-MC-272733	A

BRUNING-40-107