REV.	DESCRIPTION	DRAWN / APPD.	DATE / DATE
A	WAS 3.18	CLIFF PITTS	4-27-89
B	ADDED PILOT DIA.	CLIFF PITTS	5-1-89

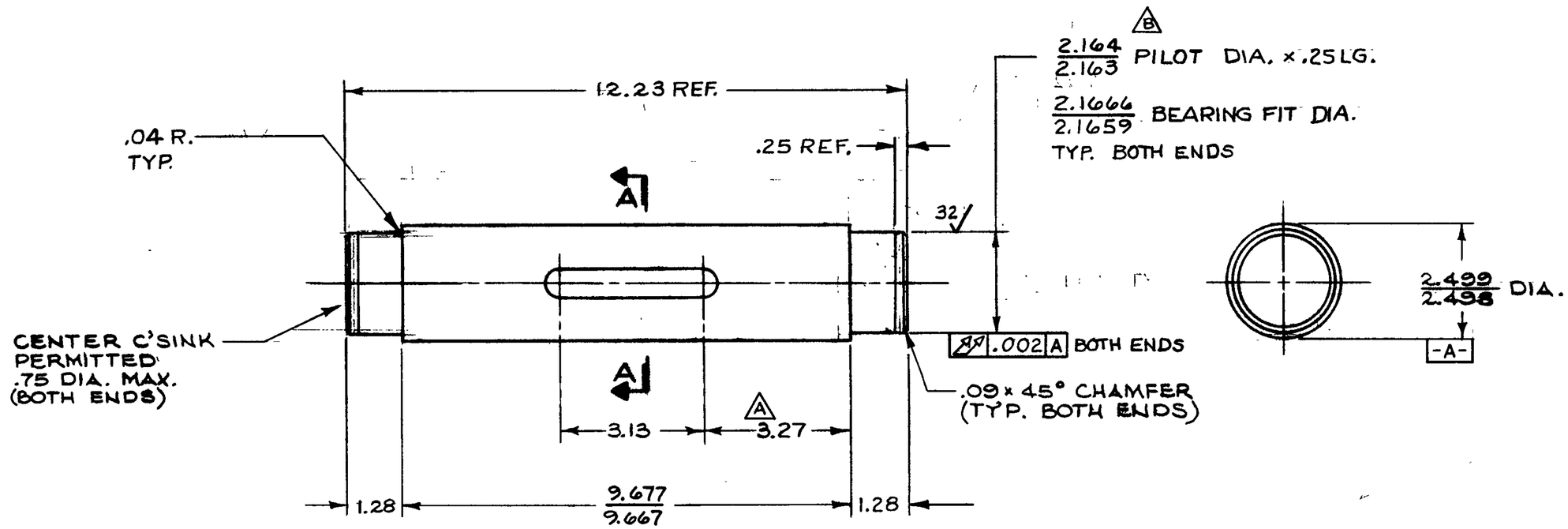

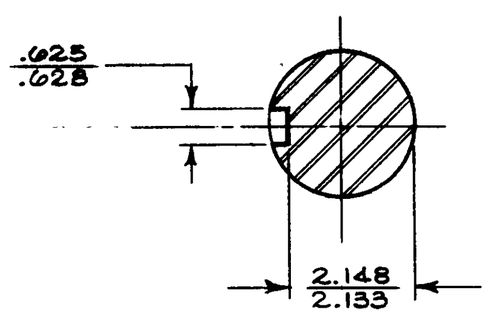

SECTION A-A

NOTE –
TOLERANCE:
3 PLACE DECIMAL ±.005
2 PLACE DECIMAL ±.010
ANGLE ±1°

ITEM NO.	PART NO.	DESCRIPTION OR SIZE	QTY. REQ.
PARTS LIST			

UNLESS OTHERWISE SPECIFIED	ORIGINATOR	E. L. BLACK	
FRACTIONS / DECIMALS / ANGLES	DRAWN	Miller	12-9-88
SEE NOTE	CHECKED	CLIFF PITTS	4-25-89
1. BREAK ALL SHARP EDGES 1/64 MAX.	APPROVED	J.F. LINDBERG	27 FEB 89
2. DO NOT SCALE DWG.	USED ON 9209.150-ME-272466		
3. DIMENSIONING IN ACCORD WITH ANSI Y14.5 STD's.	MATERIAL- 2.63 DIA. STEEL - ALLOY 1045		
63 MAX. ALL MACHINED SURFACES			

FERMI NATIONAL ACCELERATOR LABORATORY
UNITED STATES DEPARTMENT OF ENERGY

SPROCKET IDLER SHAFT
TURNTABLE SYSTEM E-740 DØ TEST
RD/MECH DEPT.

SCALE	FILMED	DRAWING NUMBER	REV.
1:2		9209.150-MC-272737	B

BRUNING-40-107