REV.	DESCRIPTION	DRAWN	DATE
		APPD.	DATE

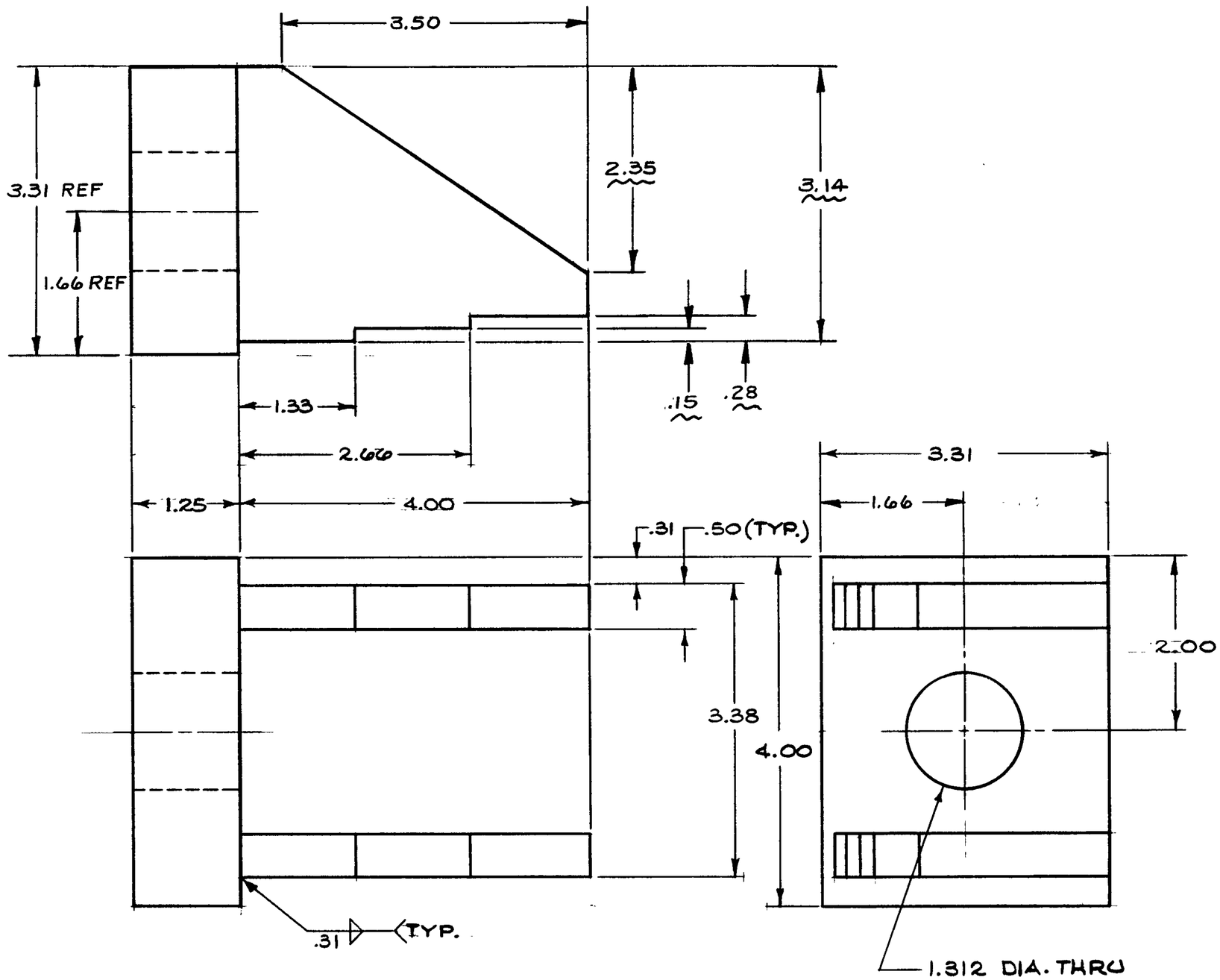

NOTE -
1. TOLERANCE :
   3 PLACE DECIMAL ±.030
   2 PLACE DECIMAL ±.060
   ANGLE ±1°
2. PLASMA CUT ACCEPTABLE EXCEPT ON MATING SURFACE

ITEM NO.	PART NO.	DESCRIPTION OR SIZE	QTY. REQ.
PARTS LIST			

UNLESS OTHERWISE SPECIFIED	ORIGINATOR	E. L. BLACK	—
FRACTIONS / DECIMALS / ANGLES	DRAWN	Miller	3-1-89
SEE NOTE	CHECKED	CLIFF PITTS	03-2-89
1. BREAK ALL SHARP EDGES 1/64 MAX.	APPROVED	J.F. LINDBERG	3 MAR. 89
2. DO NOT SCALE DWG.	USED ON	9209-ME-272759	
3. DIMENSIONING IN ACCORD WITH ANSI Y14.5 STD's.	MATERIAL-	STEEL H.R. ASTM A36	
√ MAX. ALL MACHINED SURFACES			

FERMI NATIONAL ACCELERATOR LABORATORY
UNITED STATES DEPARTMENT OF ENERGY

CHAIN ANCHOR ATTACHMENT
ROTATING MOTION SYSTEM E-740 DØ TEST
RD/MECH. DEPT.

SCALE	FILMED	DRAWING NUMBER	REV.
1:1		9209.150-MC-272760	

BRUNING-40-107