REV	DESCRIPTION	DRAWN	DATE
		APPROVED	DATE

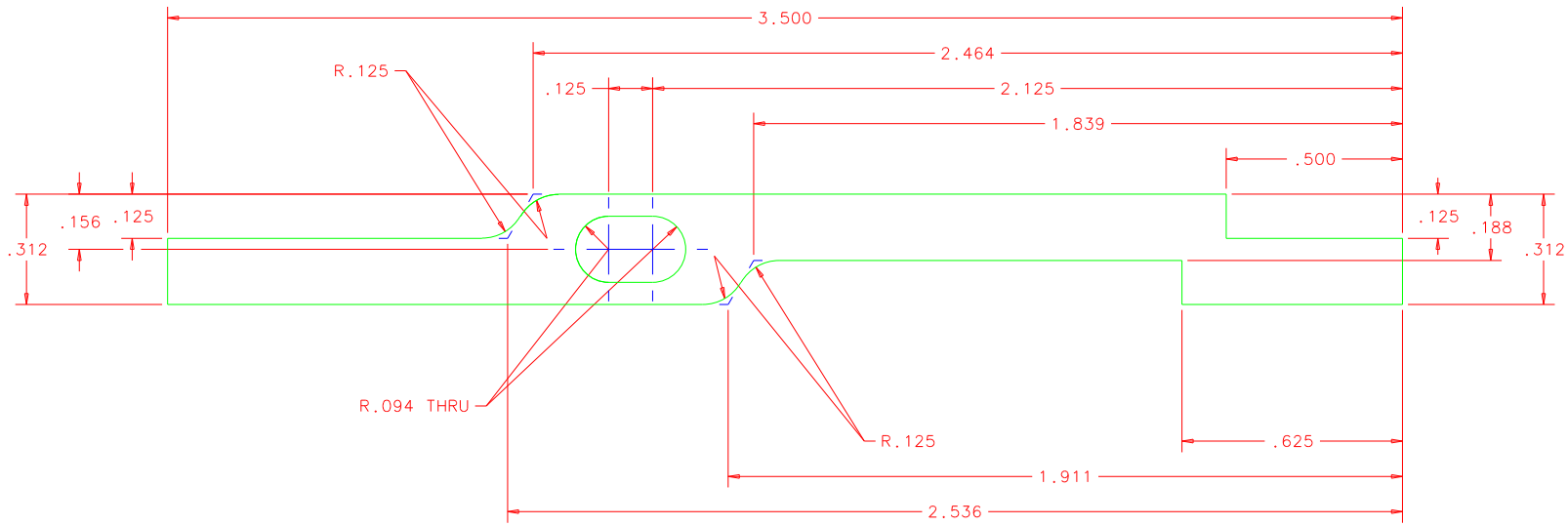

SEE NOTE 1

UNLESS OTHERWISE SPECIFIED			ORIGINATOR	J.HOWELL	31-OCT-2001
FRACTIONS	DECIMALS	ANGLES	DRAWN	J.MULVEY	08-NOV-2001
± 1/16	± .015	± 1°	CHECKED		
1. BREAK ALL SHARP EDGES .015 MAX. 2. DO NOT SCALE DRAWING. 3. DIMENSIONS BASED UPON ANSI Y14.5M-1982 4. MAX. ALL MACH. SURFACES 125			APPROVED		
			USED ON		
			MATERIAL 6063-T6 ALUMINUM		

FERMI NATIONAL ACCELERATOR LABORATORY
UNITED STATES DEPARTMENT OF ENERGY

PPD/MECHANICAL DEPT.
BTEV - STRAWS CHAMBER HOUSING
STRAIGHT EXTRUSION - PROTOTYPE

SCALE	DRAWING NUMBER	SHEET	REV
4:1	8918.160-MC-407190	1 OF 1	

CREATED WITH : Ideas8m4 | GROUP: PPD/MECHANICAL SUPPORT

TRUE SIZE VIEW
SCALE 1:1

NOTES:

1. STANDARD ALUMINUM ASSOCIATION TOLERANCES.

Plotted by howell on 11-Feb-02 , File: STRAIGHT_EXTRUSION_PROTOTYPE.pff