REV	DESCRIPTION	DRAWN	DATE
		APPROVED	DATE

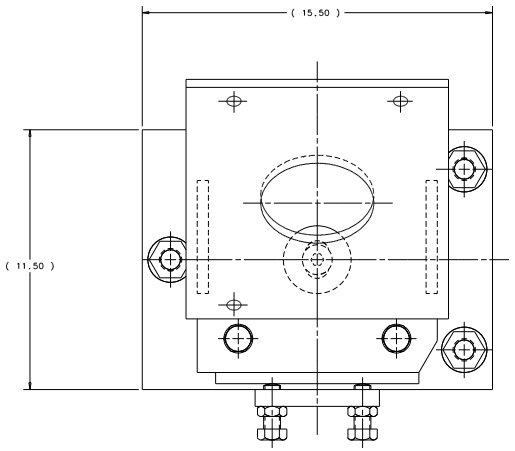

MULTI-WIRE MONITOR
NOT SHOWN IN THIS VIEW FOR CLARITY

PRELIMINARY

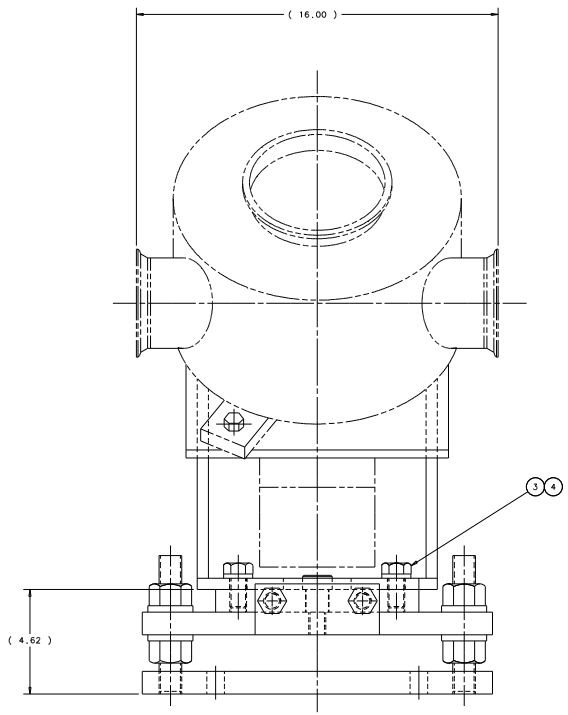

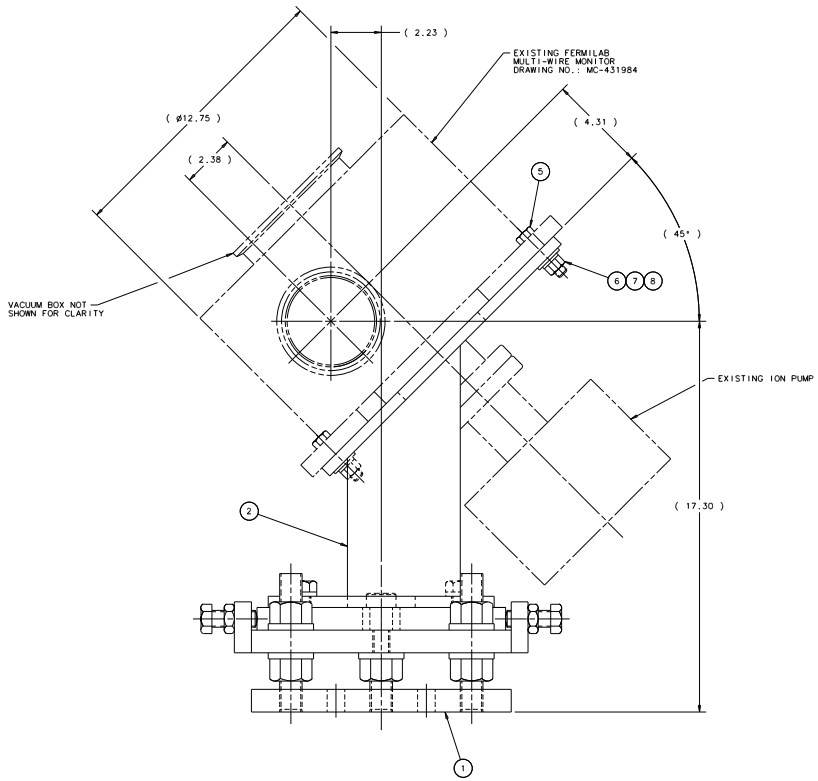

NOTES: 1) EST. WT. = 297.00 LBS.

ITEM	PART NO.	DESCRIPTION OR SIZE	QTY.
8	COM'L.	LOCK WASHER: 1/2 SCREW; ZINC PLATED STEEL	3
7	COM'L.	FLAT WASHER: 1/2 SCREW; ZINC PLATED STEEL	3
6	COM'L.	HEX NUT:1/2-13UNC; ZINC PLATED STEEL	3
5	92620A722	HEX HEAD CAP SCREW:1/2-13UNC X 2-1/2 LG.; FULL THREAD;GRADE 8 ZINC PLATED;McMASTER-CARR	3
4	COM'L.	LOCK WASHER: 3/4 SCREW; ZINC PLATED STEEL	4
3	92620A839	HEX HEAD CAP SCREW:3/4-10UNC X 1-1/2 LG.; FULL THREAD;GRADE 8 ZINC PLATED;McMASTER-CARR	4
2	MD-431854	MONITOR ADAPTER WELDMENT	1
1	MD-431841	5-AXIS ADJUSTER ASSEMBLY	1

PARTS LIST

UNLESS OTHERWISE SPECIFIED			ORIGINATOR	G.TROTTER	02-APR-2004
.XX	.XXX	ANGLES	DRAWN	B.ELLISON	02-APR-2004
± **	± ***	± **	CHECKED		
			APPROVED		

1. BREAK ALL SHARP EDGES .015 MAX.
2. DO NOT SCALE DRAWING.
3. DIMENSIONS BASED UPON ASME Y14.5M-1994
4. MAX. ALL MACH. SURFACES 125
5. DRAWING UNITS:U.S.INCH

USED ON

MATERIAL
SEE PARTS LIST ABOVE

FERMI NATIONAL ACCELERATOR LABORATORY
UNITED STATES DEPARTMENT OF ENERGY

PPD/MECHANICAL DEPT.
NUMI MULTI-WIRE MONITOR
5-AXIS ADJUSTMENT MOUNTING ASSY

SCALE	DRAWING NUMBER	SHEET	REV
1:2	8875.119-ME-431887	1 OF 1	

CREATED WITH : Ideas9m3 GROUP: PPD/MECHANICAL DEPARTMENT

Plotted by mlwong on 06-Apr-04 , File: numi_multi_monitor_adj_assy.pff