REV	DESCRIPTION	DRAWN	DATE
		APPROVED	DATE

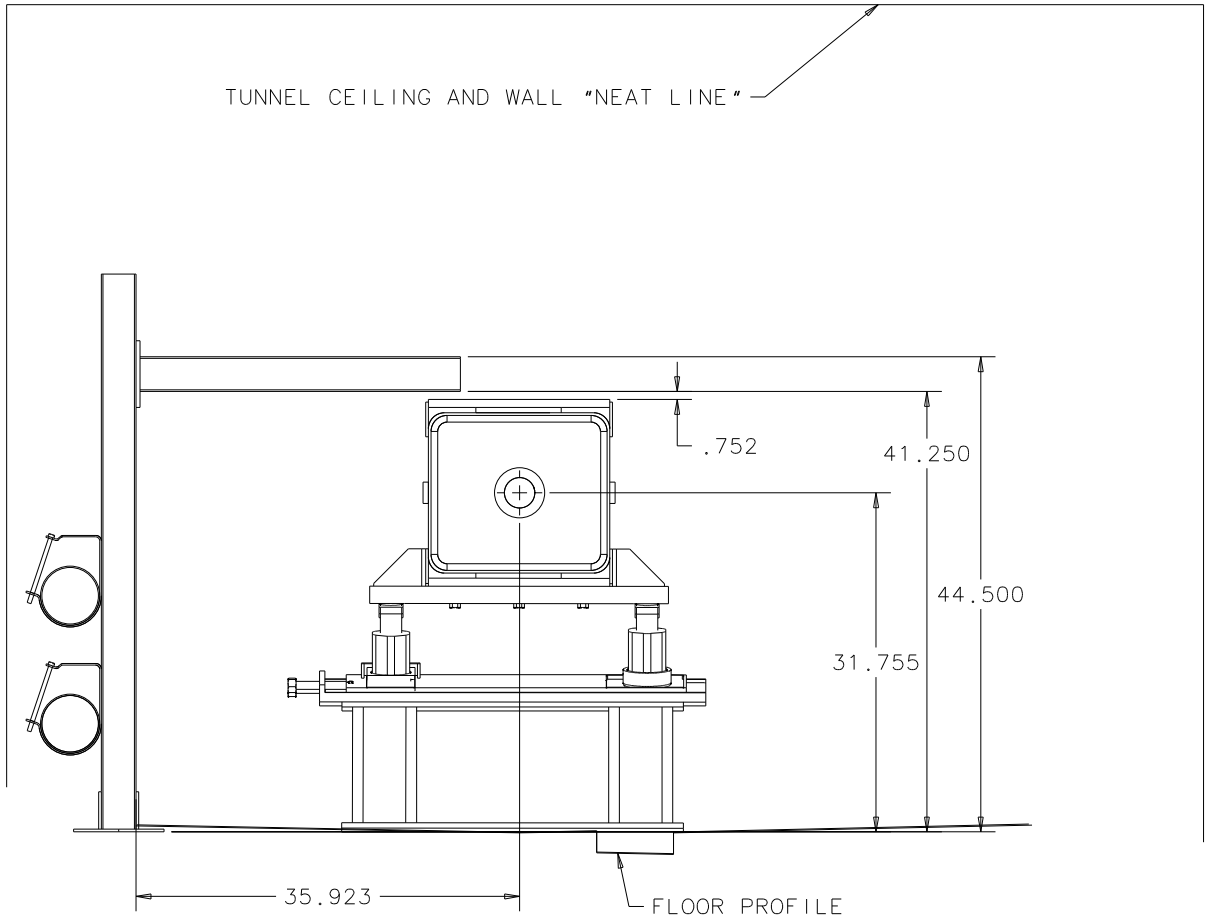

UNLESS OTHERWISE SPECIFIED			ORIGINATOR	M. WONG	
.XX	.XXX	ANGLES	DRAWN		
±	±	± 1°	CHECKED		
1. BREAK ALL SHARP EDGES .015 MAX. 2. DO NOT SCALE DRAWING. 3. DIMENSIONS BASED UPON ANSI Y14.5M-1982 4. ALL DIMENSIONS ARE INCHES 5. MAX. ALL MACH. SURFACES 125			APPROVED		
			USED ON		
			MATERIAL		

FERMI NATIONAL ACCELERATOR LABORATORY
UNITED STATES DEPARTMENT OF ENERGY

NUMI CARRIER TUNNEL
HQ114 MAGNET - END VIEW

SCALE	DRAWING NUMBER	SHEET	REV
	. — —	1 OF 1	

CREATED WITH : GROUP: