Proposed Readout for NUMI Off-Axis RPC Cosmic Ray Test Stand

Gary Drake
Charlie Nelson
Mar. 25, 2003

C. Nelson -- 25-Mar-2003

6Ux280 VME Card

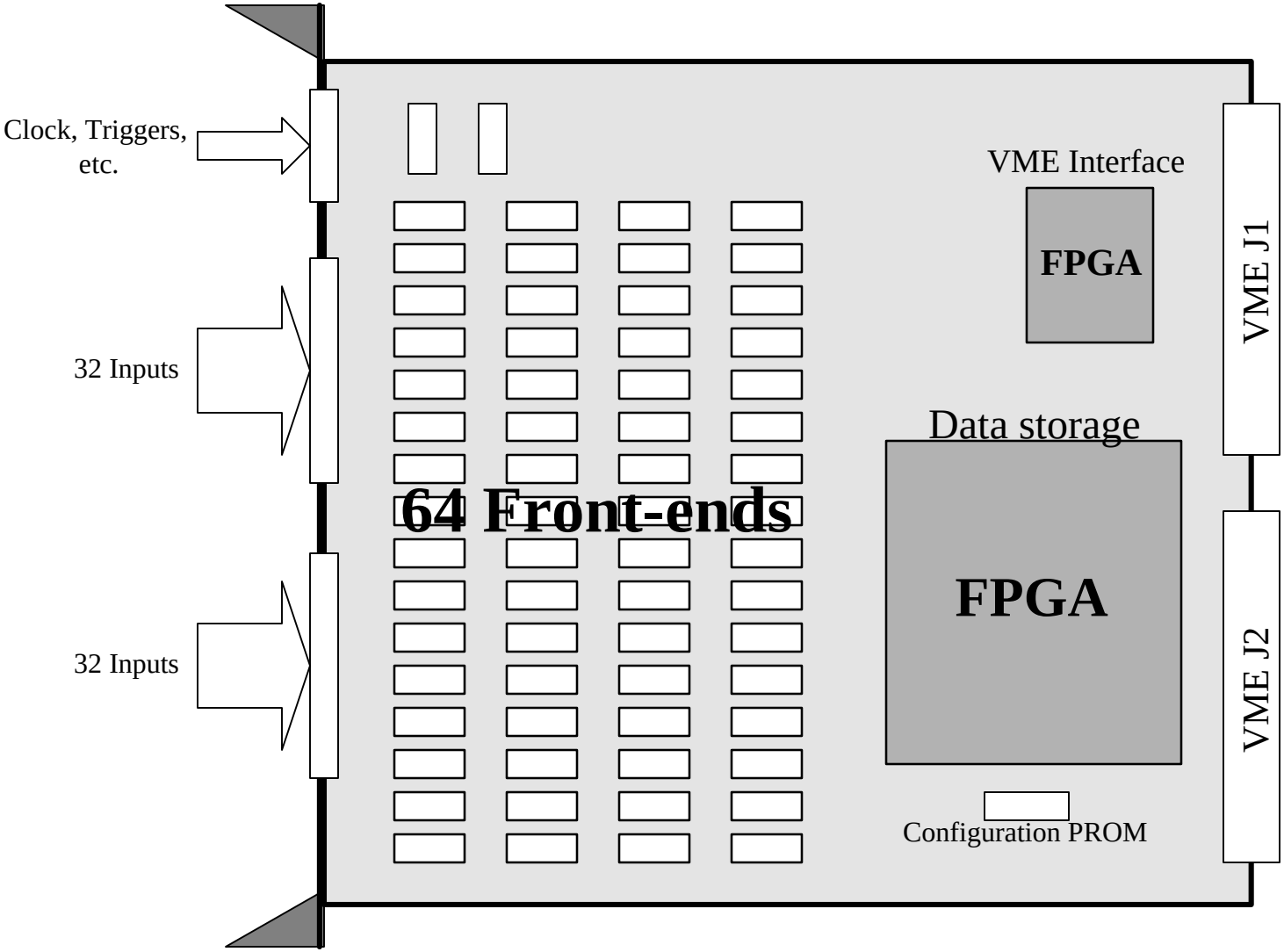

C. Nelson -- 25-Mar-2003

Simple Front-end for Prototype RPC

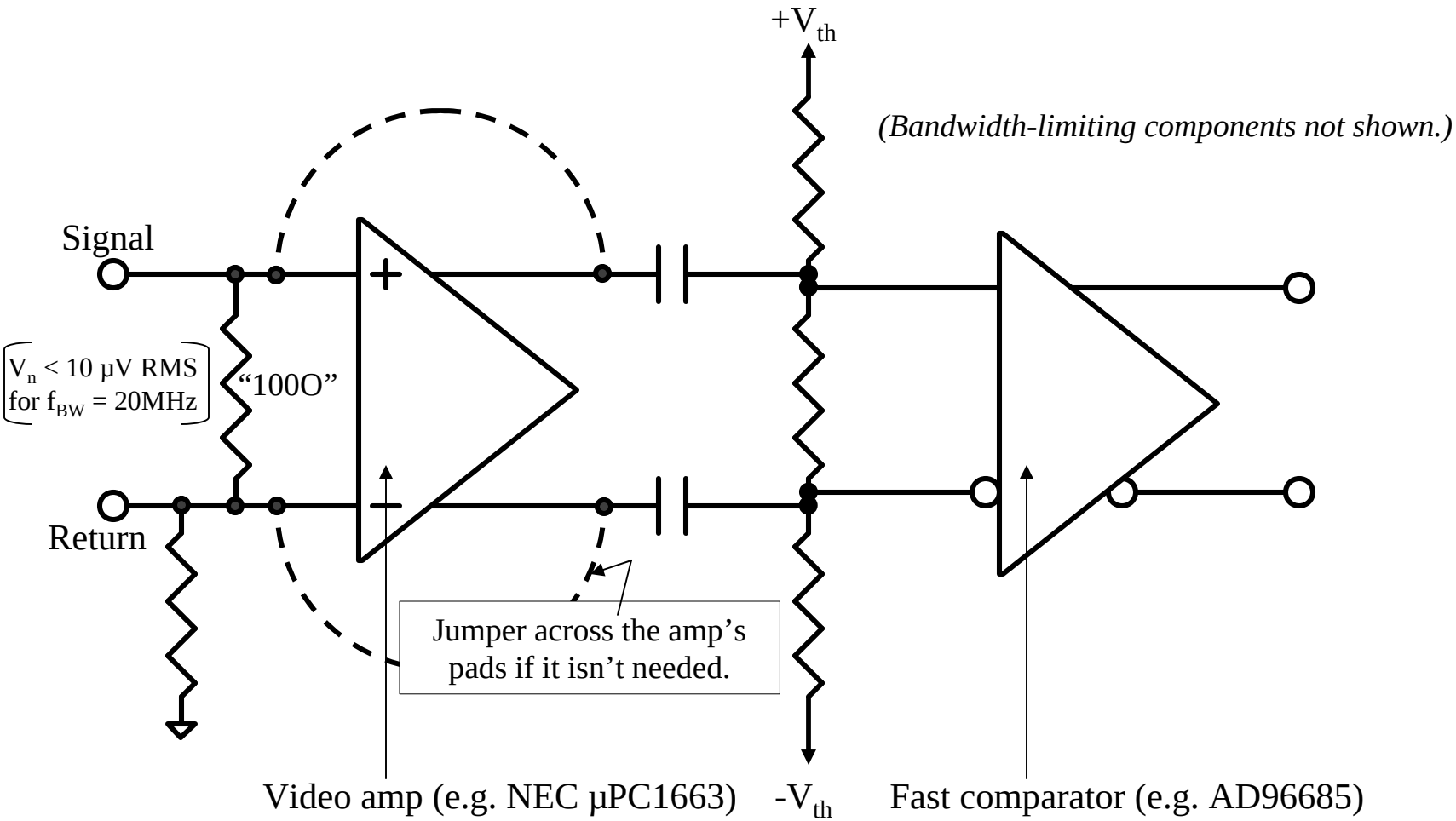

Data Storage in FPGA

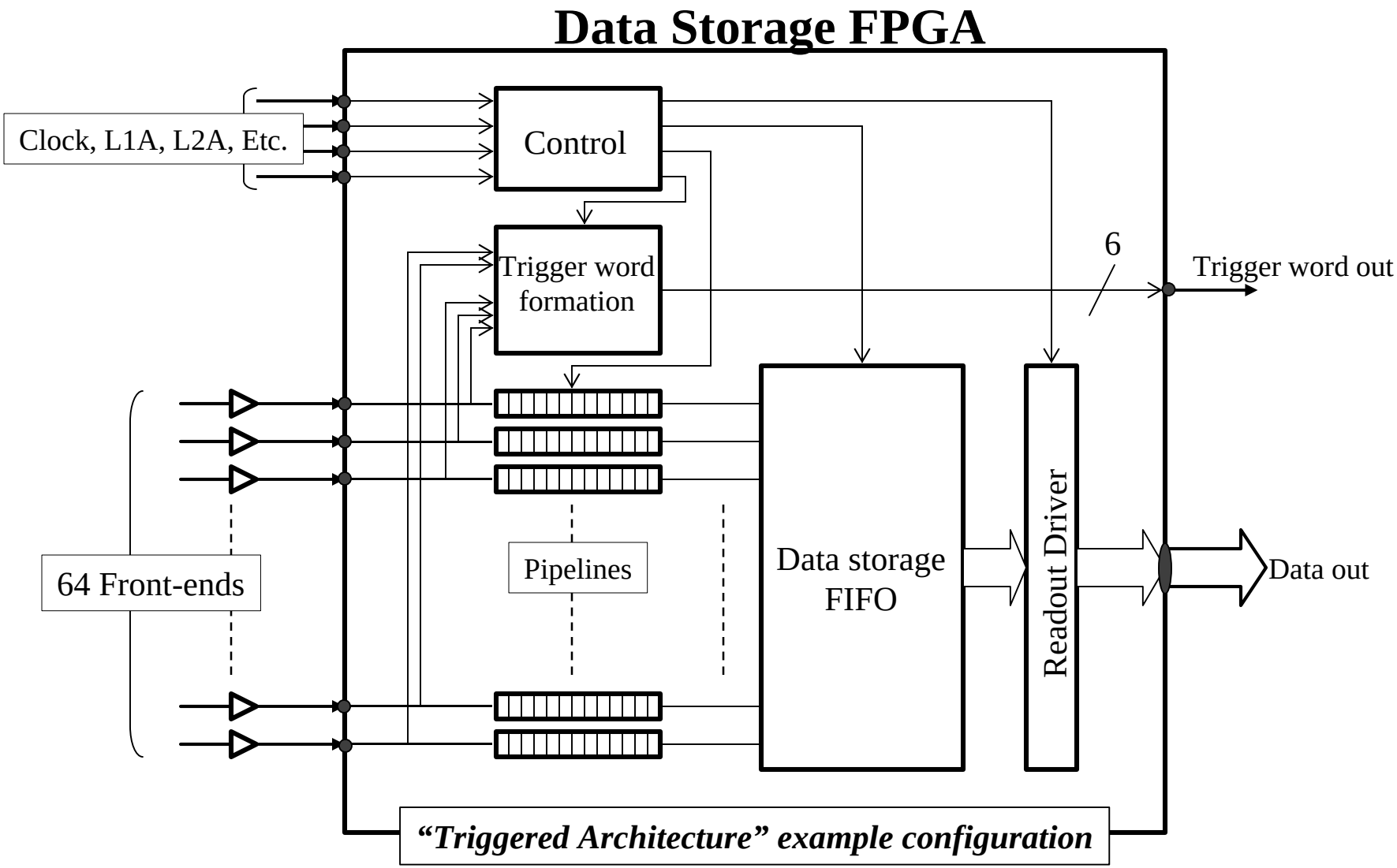

PC Board Stackup

Staggering the front-ends to achieve 64 channels means incurring some digital-output-to-analog-input crosstalk.

Try to minimize output-to-input crosstalk by using different, internal layers for analog inputs and comparator outputs.

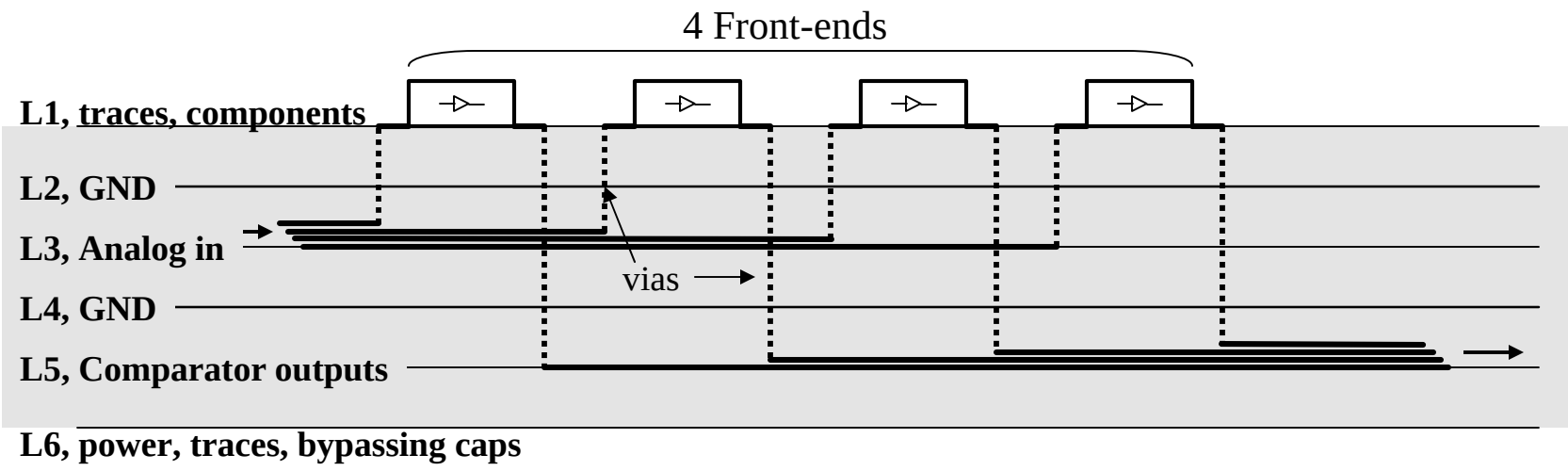

(6-layer pc board example stackup)

Cost/Board:

Video Amps	64*$ 0.60	$ 38.40
Comparators	64*$ 1.50	$ 96.00
Misc Analog	64*$ 1.00	$ 64.00
FPGA	1*$60.00	$ 60.00
FPGA	1*$38.00	$ 38.00
Misc Digital	32*$ 2.00	$ 64.00
Connectors	2*$10.00	$ 20.00
Connector	2*$ 3.50	$ 7.00
Connector	1*$ 2.00	$ 4.00
Misc	1*$ 20.00	$ 20.00
PCB Fab	1*$40.00	$ 40.00
PCB Assembly	1*$25.00	$ 25.00
Total		$476.40

Cost for 5000 CH: 5000 CH / 64CH/Bd = 80 Bds

Make 100 Bds

Prototypes	$ 5K
100 Boards @ $500/Bd	$ 50K
PCB Fab NRE	$ 1K
Assembly NRE	$ 1K
Checkout @ $30/Bd	$ 3K
Total	$ 60K

Proposed Development Plan:

Charlie Nelson Designs Board (No Cost…)
Gary Drake Designs FPGAs & System (LC Work)
FNAL Buys Prototypes, Parts, & Services
FNAL Effort for Prototype Assembly
Joint ANL/FNAL Effort for Checkout

Timescale: Prototypes by May
Production by Summer