Draft2_RDR_outline_PHG_060116.doc – don't blame me, I'm at 35,000 feet again!
I've tried to pick chapter headings from TESLA TDR, USLCTOS, NLC, GLC
and elements of Tor's WBS from Frascati (early December 2005)
This is still only a high-level outline. Even if it is acceptable,
we will need next level of detail following WBS very soon.

Break into 4 volumes:

Volume 1: Overview and Executive Summary – both Accelerator & Detector
(~ 100 pages) Vol. 1 should be available both hard copy and electronically.
Publish URL of this Vol. 1, and then once you get to electronic Vol. 1
you get links to complete document, volume by volume, chapter by chapter,
sub-chapter by sub-chapter, as deep as we care to go

Volume 2: The ILC Accelerator (~ 500-1000 virtual pages, don't publish hard copy?)
Can go as deep as you want with URLs to backup materials

Volume 3: The Physics Case for the ILC – maybe this should be Vol 2
To be provided by LCWWS – Jim Brau

Volume 4: Detector(concepts) – again provided by LCWWS – Jim Brau

****
Volume 2: The ILC Accelerator

I. Introduction
- A. History (might be in Vol. 1)
- B. BCD (and RDR, plan for TDR) concept, configuration, and rationale
- C. Performance Parameters Lists – and why – how they were generated
- D. Design Requirements
- E. Design Overview
- F. General Design Considerations
- G. Upgrade Path(s)
- H. Alternate Configurations, R&D, unanswered question/unproven concepts(?)
- J. Relation to European XFEL Project
- K. Introduce Area Systems, Technical Systems, Global Systems, and WBS (glue)
- L. Introduce Cost Estimating Methodology
- M. Siting Considerations, 3 or 4 or more site studies (& site-dependent cost ests)

--- Area Systems: Introduce concept of "interface" sections between the different Area System chapters. These Interface Sections will include a description of the physical boundaries of responsibilities between two Area Systems and include a tabulation of the e- and e+ beam parameters at that interface, such as emittances, dispersions, and Twiss parameters, at that interface. These input/output interfaces sections will not be directly included in the two Area System chapter, but will have web links in those sections for

easy reference, if desired. The following sketch illustrates the flow of the beams and the interfaces between the Area Systems.

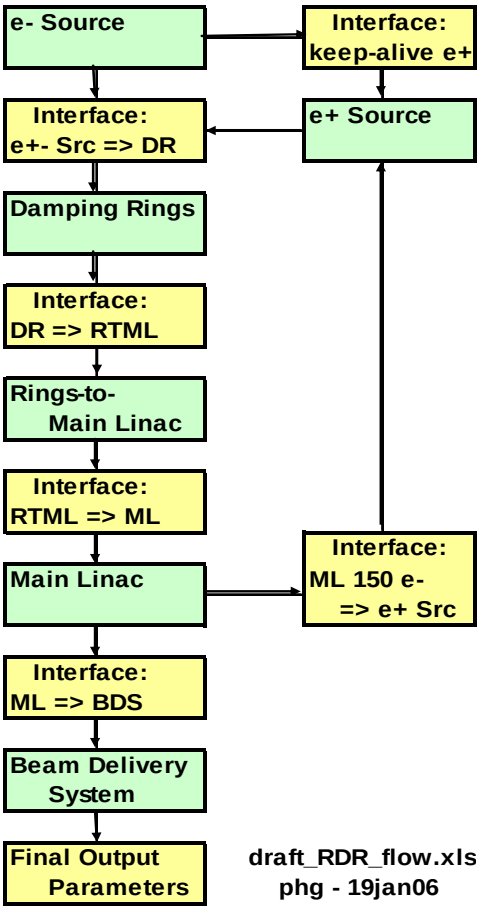

II. Electron Source

- A. Considerations and accelerator physics
- B. e- source(s) up to pre-linac, unpolarized and polarized
- C. e- 5 GeV Linac
- D. Keep-alive Positron Source
- E. Alternate Configurations

Link to Interface: e+ Sources to Damping Rings
Link to Interface: Keep-alive Positron Source

III. Positron Source

Link to Interface: Keep-alive Positron Source
Link to Interface: ML (150 GeV e-) to e+ Source

- A. Considerations, unpolarized and polarized, accelerator physics
- B. e+ source(s) up to pre-linac, undulator and keep-alive source (why needed)
- C. transfer line to pre-linac

D. e+ 5 GeV Linac (anything different than e- 5 GeV Linac?)
E. Alternate Configurations: conventional and Compton e+ sources
Link to Interface: e+ Sources to Damping Rings

Interface: e+ Sources to Damping Rings
Boundaries and e+ parameters: emittances, dispersion, Twiss parameters

Interface: Keep-alive Positron Source
Boundaries and e- parameters: emittances, dispersion, Twiss parameters

IV. Damping Rings
Link to Interface: e+ Sources to Damping Rings
A. Considerations and Accelerator Physics
B. e- Damping Ring
C. e+ Damping Rings
D. Alternate Configurations: 17 km dogbones, etc.
Link to Interface: DR to RTLM & BC

Interface: Damping Rings to Ring-to-Main Linac & Bunch Compressors
Boundaries and e+ parameters: emittances, dispersion, Twiss parameters

V. Ring to Main Linac and Bunch Compressor
Link to Interface: DR to RTLM & BC
A. General Description, turn-around, upgrade path
B. Considerations and Accelerator Physics
C. RTML and Bunch Compressor(s) Description
D. Alternate Configurations
Link to Interface: RTML & BC to Main Linac

Interface: RTML & BC to Main Linac
Boundaries and e+ parameters: emittances, dispersion, Twiss parameters

VI. Main Linac
Link to Interface: RTML & BC to Main Linac
A. Considerations and Accelerator Physics
B. Development of SC RF Linacs
C. Continuing R&D on Main Linac components and sub-systems
D. Technical Description of Main Linac
D1 – Cavities (Tech Sys) (should room temp RF cavities be here?)
D2 – Cryomodules (Technical Systems)
D3 – RF Systems (Tech Sys) for SC cavities – other here?
E. Alternate Configurations
Link to Interface: Main Linac (150 GeV e-) to e+ Source
Link to Interface: Main Linac to Beam Delivery System

Interface: Main Linac (150 GeV e-) to e+ Source

Boundaries and e- parameters: emittances, dispersion, Twiss parameters

Interface: Main Linac to Beam Delivery System

Boundaries and e± parameters: emittances, dispersion, Twiss parameters

VII. Beam Delivery System, Final Focus, Machine Detector Interface, Beam Dumps

link to Interface: Main Linac to Beam Delivery System

A. Considerations and Accelerator Physics
B. Technical Descriptions
C. Final output parameters, Luminosity, and backgrounds for detectors
D. Alternate Configurations: various crossing angles, gamma-gamma, # detectors, detector layout configurations

Link to Output Parameters at Interaction Point

Output Parameters at Interaction Point

e± parameters: emittances, dispersion, Twiss parameters,
Luminosities, Disruptions, Energy Spectrum, etc.

VII. Global Systems and common Instrumentation:

A. Commissioning, Operations, and Reliability
    1. Machine Protection System
    2. Personnel Protection System
    3. Availability Requirements
    4. Fault Recovery and Operations
    5. Commissioning Schedule
B. Control System
    1. Control System
    2. Timing System
    3. Applications Software
C. Cryogenics
D. Conventional Facilities & Siting
    1. Site and studies
    2. Accelerator Tunnels and other underground facilities
    3. Experimental Halls, etc.
    4. Surface Service Area Buildings and Facilities
    5. Central Campus Facilities
    6. Electrical Power Distributions
    7. Cooling Systems (heat rejection)
    8. Heating, Ventilation, and Cooling (environmental parameters)
    9. Environmental, Safety, and Health
    10. Component alignment systems, vibrations, etc.
E. Installation
F. common Instrumentation (include here with Global Systems)

--- other Technical Systems: Vacuum, Magnet, Cryomodule, Cavity Package, RF Power, Dumps and Collimators – include with Area Systems

IX. Construction, Cost, and Schedule

- A. Costing Methodology – CERN “Core”, ITER “Value”, translation for funding agencies
- B. Component Fabrication – Industrial Studies
- C. Quality Assurance & Component Testing
- E. Material Handling and Storage
- F. Management & Administration Model
- G. Institutional Manpower Estimates
- H. WBS and WBS dictionary
- I. Cost Estimate – tricky, must explain AGAIN
- J. Uncertainties in Cost Estimate, Basis of Estimate

X. Not Part of ILC Construction Project (but should describe and give cost-estimate)

- A. R&D
- B. Preparation of RDR and TDR
- C. Commissioning and pre-operations
- D. Operations
- E. Decommissioning