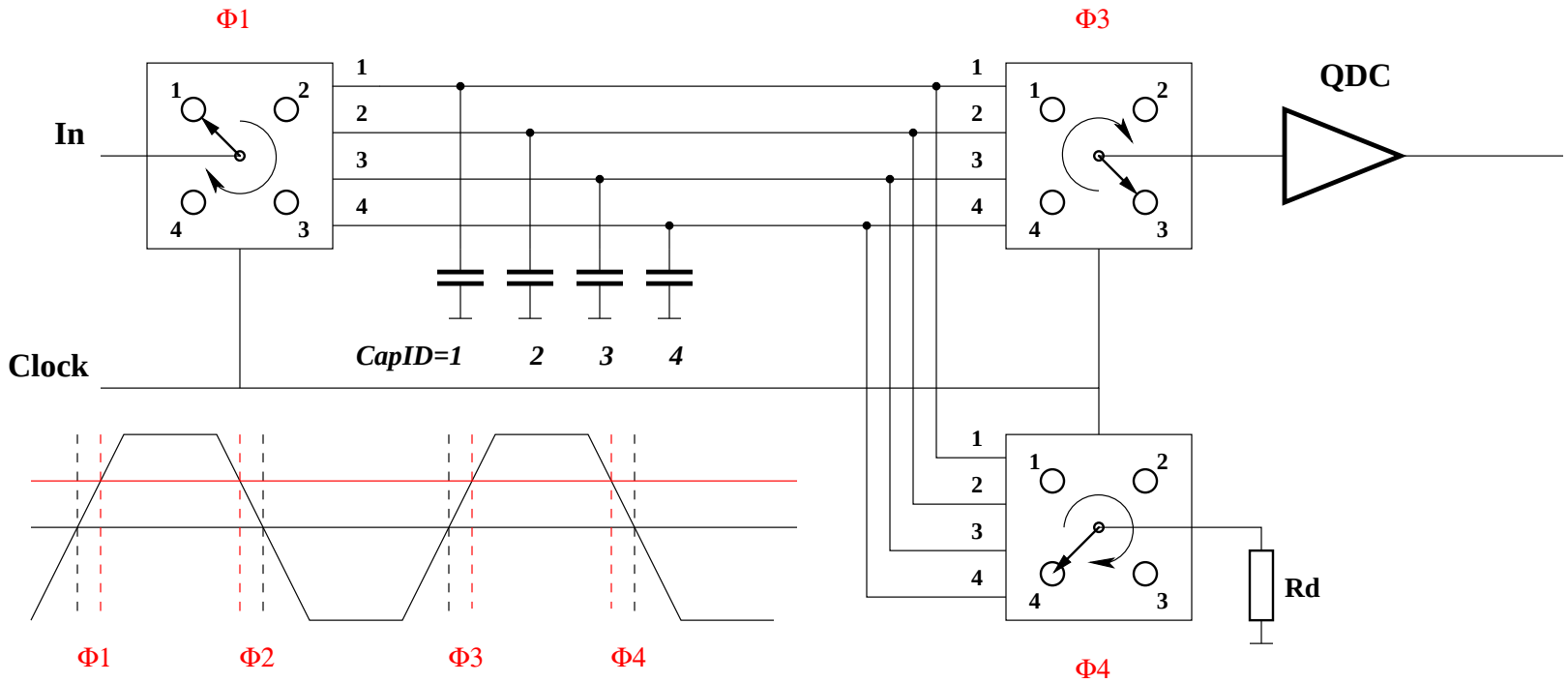
Φ1
Φ3
In
QDC
Clock
CapID=1
2
3
4
Rd
Φ1
Φ2
Φ3
Φ4
Φ4

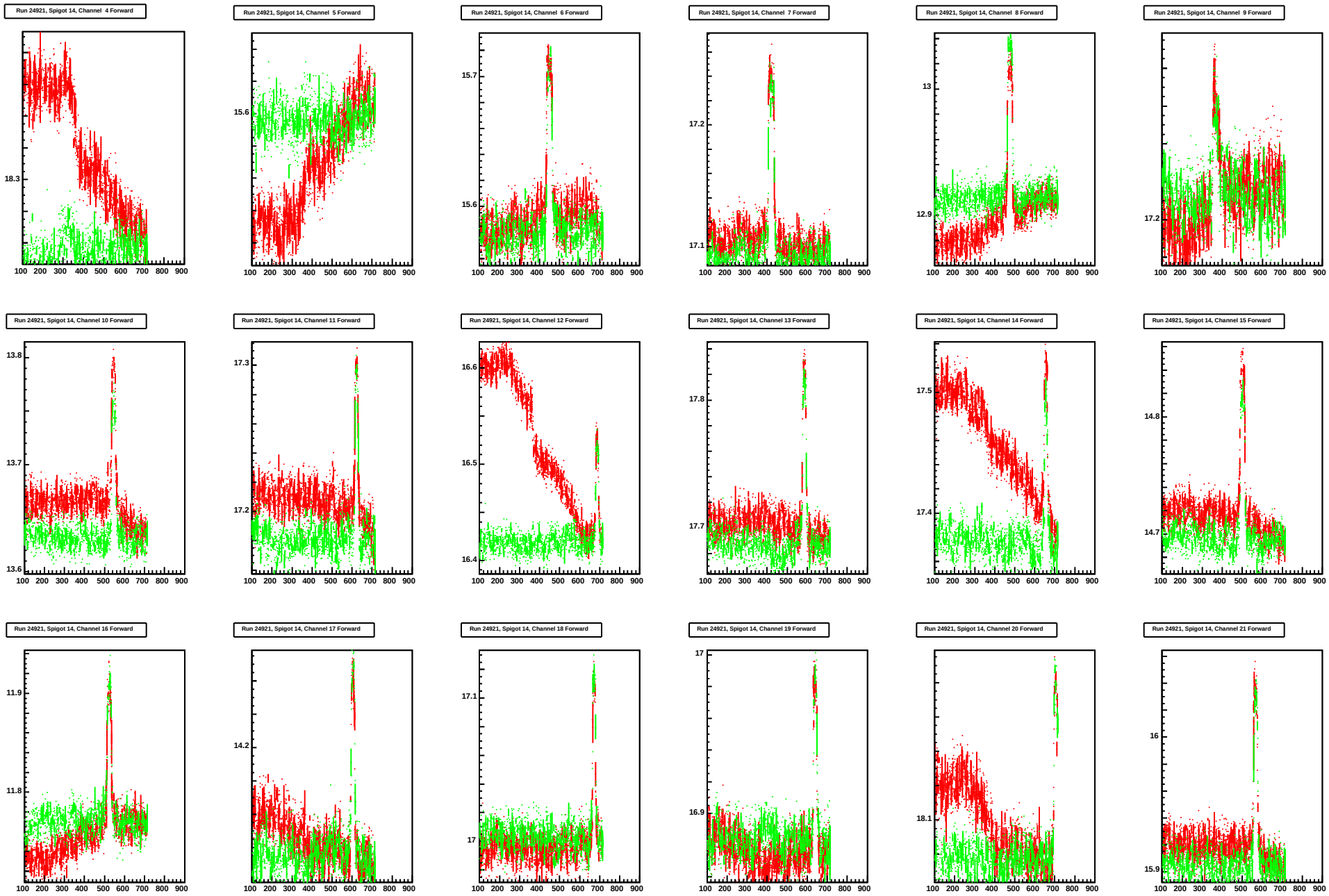
Run 24921, Spigot 14, Channel 4 Forward
18.3
Run 24921, Spigot 14, Channel 5 Forward
15.6
Run 24921, Spigot 14, Channel 6 Forward
15.7
15.6
Run 24921, Spigot 14, Channel 7 Forward
17.2
17.1
Run 24921, Spigot 14, Channel 8 Forward
13
12.9
Run 24921, Spigot 14, Channel 9 Forward
17.2
Run 24921, Spigot 14, Channel 10 Forward
13.8
13.7
13.6
Run 24921, Spigot 14, Channel 11 Forward
17.3
17.2
Run 24921, Spigot 14, Channel 12 Forward
16.6
16.5
16.4
Run 24921, Spigot 14, Channel 13 Forward
17.8
17.7
Run 24921, Spigot 14, Channel 14 Forward
17.5
17.4
Run 24921, Spigot 14, Channel 15 Forward
14.8
14.7
Run 24921, Spigot 14, Channel 16 Forward
11.9
11.8
Run 24921, Spigot 14, Channel 17 Forward
14.2
Run 24921, Spigot 14, Channel 18 Forward
17.1
17
Run 24921, Spigot 14, Channel 19 Forward
17
16.9
Run 24921, Spigot 14, Channel 20 Forward
18.1
Run 24921, Spigot 14, Channel 21 Forward
16
15.9
100 200 300 400 500 600 700 800 900

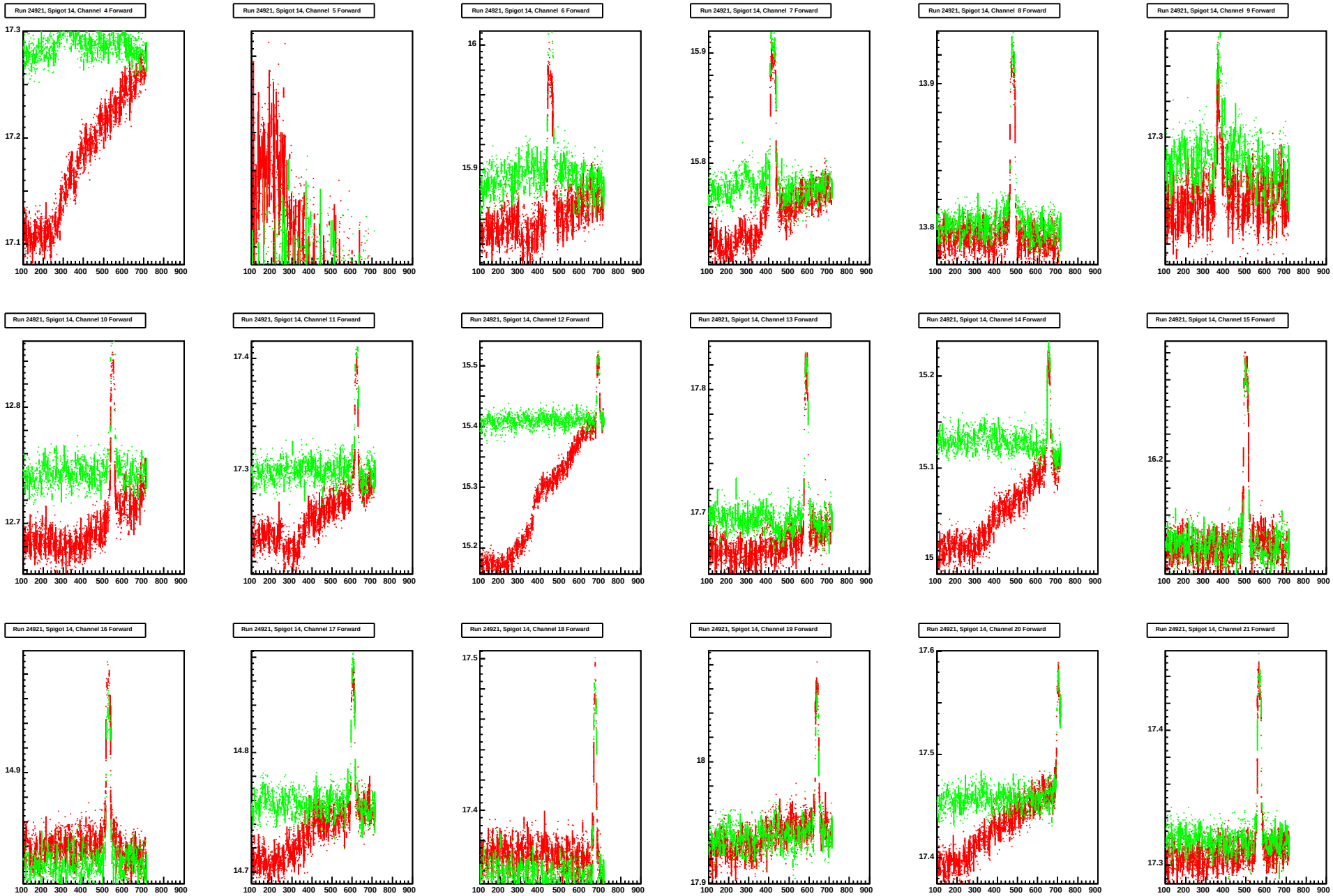
Run 24921, Spigot 14, Channel 4 Forward
Run 24921, Spigot 14, Channel 5 Forward
Run 24921, Spigot 14, Channel 6 Forward
Run 24921, Spigot 14, Channel 7 Forward
Run 24921, Spigot 14, Channel 8 Forward
Run 24921, Spigot 14, Channel 9 Forward
Run 24921, Spigot 14, Channel 10 Forward
Run 24921, Spigot 14, Channel 11 Forward
Run 24921, Spigot 14, Channel 12 Forward
Run 24921, Spigot 14, Channel 13 Forward
Run 24921, Spigot 14, Channel 14 Forward
Run 24921, Spigot 14, Channel 15 Forward
Run 24921, Spigot 14, Channel 16 Forward
Run 24921, Spigot 14, Channel 17 Forward
Run 24921, Spigot 14, Channel 18 Forward
Run 24921, Spigot 14, Channel 19 Forward
Run 24921, Spigot 14, Channel 20 Forward
Run 24921, Spigot 14, Channel 21 Forward
100 200 300 400 500 600 700 800 900

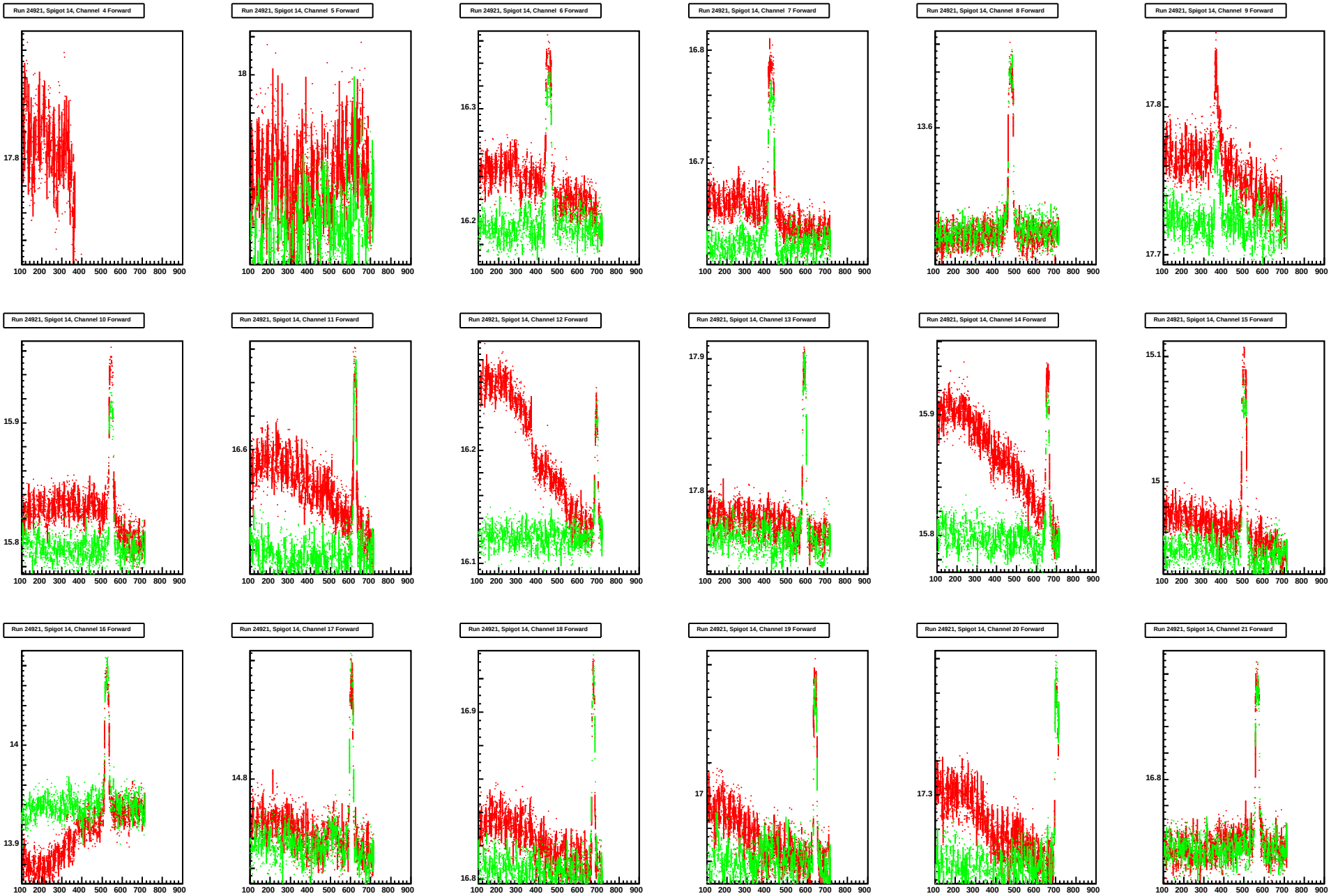
Run 24921, Spigot 14, Channel 4 Forward
17.8
Run 24921, Spigot 14, Channel 5 Forward
18
Run 24921, Spigot 14, Channel 6 Forward
16.3
16.2
Run 24921, Spigot 14, Channel 7 Forward
16.8
16.7
Run 24921, Spigot 14, Channel 8 Forward
13.6
Run 24921, Spigot 14, Channel 9 Forward
17.8
17.7
Run 24921, Spigot 14, Channel 10 Forward
15.9
15.8
Run 24921, Spigot 14, Channel 11 Forward
16.6
Run 24921, Spigot 14, Channel 12 Forward
16.2
16.1
Run 24921, Spigot 14, Channel 13 Forward
17.9
17.8
Run 24921, Spigot 14, Channel 14 Forward
15.9
15.8
Run 24921, Spigot 14, Channel 15 Forward
15.1
15
Run 24921, Spigot 14, Channel 16 Forward
14
13.9
Run 24921, Spigot 14, Channel 17 Forward
14.8
Run 24921, Spigot 14, Channel 18 Forward
16.9
16.8
Run 24921, Spigot 14, Channel 19 Forward
17
Run 24921, Spigot 14, Channel 20 Forward
17.3
Run 24921, Spigot 14, Channel 21 Forward
16.8
100 200 300 400 500 600 700 800 900

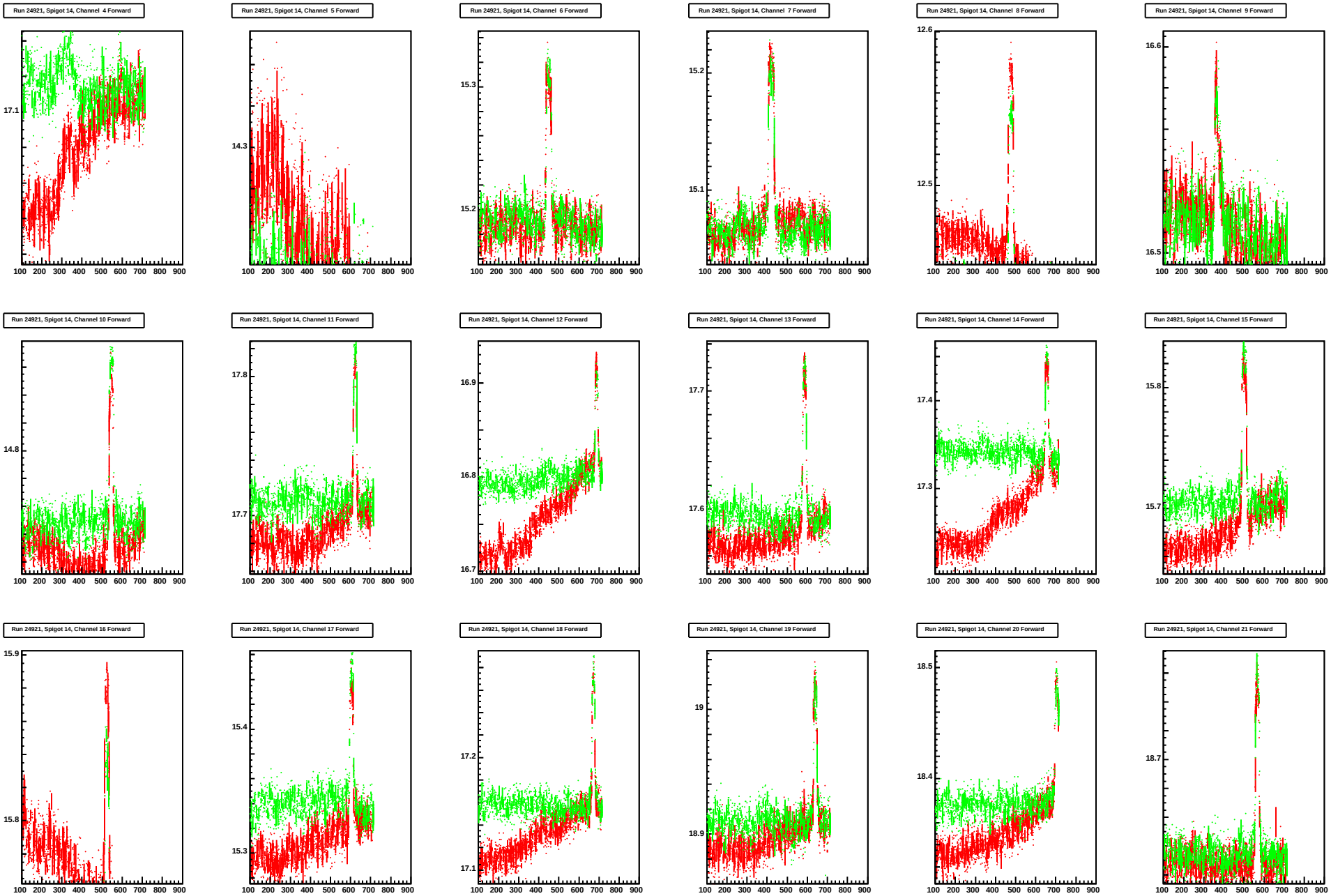
Run 24921, Spigot 14, Channel 4 Forward
17.1
Run 24921, Spigot 14, Channel 5 Forward
14.3
Run 24921, Spigot 14, Channel 6 Forward
15.3
15.2
Run 24921, Spigot 14, Channel 7 Forward
15.2
15.1
Run 24921, Spigot 14, Channel 8 Forward
12.6
12.5
Run 24921, Spigot 14, Channel 9 Forward
16.6
16.5
Run 24921, Spigot 14, Channel 10 Forward
14.8
Run 24921, Spigot 14, Channel 11 Forward
17.8
17.7
Run 24921, Spigot 14, Channel 12 Forward
16.9
16.8
16.7
Run 24921, Spigot 14, Channel 13 Forward
17.7
17.6
Run 24921, Spigot 14, Channel 14 Forward
17.4
17.3
Run 24921, Spigot 14, Channel 15 Forward
15.8
15.7
Run 24921, Spigot 14, Channel 16 Forward
15.9
15.8
Run 24921, Spigot 14, Channel 17 Forward
15.4
15.3
Run 24921, Spigot 14, Channel 18 Forward
17.2
17.1
Run 24921, Spigot 14, Channel 19 Forward
19
18.9
Run 24921, Spigot 14, Channel 20 Forward
18.5
18.4
Run 24921, Spigot 14, Channel 21 Forward
18.7
100 200 300 400 500 600 700 800 900