PROGRESS on HCAL ELECTRONICS SIMULATION in ORCA

S. Abdullin, UMD

Items to implement & issues to study :

- http://cmsdoc.cern.ch/~abdullin/jetmet/ORCA/HCAL/electronics

Currently under way :

- ADC readout quantization
- HCAL GEANT Hits time is taking into account

} via SimpleConfigurable in .orcarc

- "Pure" energy to add to RecHits (make it persistent) or just to Ntuples record ?

QIE-ADC SPECIFICATION

S.Los HCAL/CMS 12/14/00

QIE stands for

- Q - charge,
- I - integrating,
- E - encoding of range.

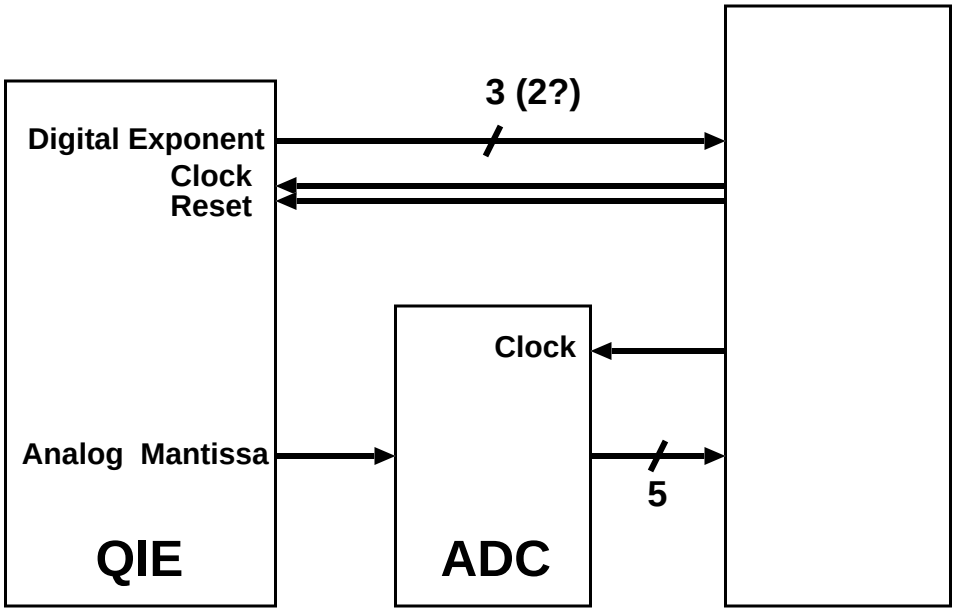

Fig. 9.3 from HCAL TDR

HCAL QIE Transfer Function
QIE Data Word

MSB	6	5	4	3	2	LSB
Range #		FADC Code				

Range 1			Range 2			Range 3			Range 4		
FADC code	Bin Size	Charge	FADC code	Bin size	Charge	FADC code	Bin size	Charge	FADC code	Bin size	Charge
0	1	-1.5	32	5	•	64	25	•	96	125	•
1	1	-0.5	33	5	•	65	25	•	97	125	•
2	1	0.5	34	5	62.5	66	25	372.5	98	125	1922.5
3	1	1.5	35	5	67.5	67	25	397.5	99	125	2047.5
4	1	2.5	36	5	72.5	68	25	422.5	100	125	2172.5
5	1	3.5	37	5	77.5	69	25	447.5	101	125	2297.5
6	1	4.5	38	5	82.5	70	25	472.5	102	125	2422.5
7	1	5.5	39	5	87.5	71	25	497.5	103	125	2547.5
8	1	6.5	40	5	92.5	72	25	522.5	104	125	2672.5
9	1	7.5	41	5	97.5	73	25	547.5	105	125	2797.5
10	1	8.5	42	5	102.5	74	25	572.5	106	125	2922.5
11	1	9.5	43	5	107.5	75	25	597.5	107	125	3047.5
12	1	10.5	44	5	112.5	76	25	622.5	108	125	3172.5
13	1	11.5	45	5	117.5	77	25	647.5	109	125	3297.5
14	1	12.5	46	5	122.5	78	25	672.5	110	125	3422.5
15	1	13.5	47	5	127.5	79	25	697.5	111	125	3547.5
16	2	14.5	48	10	132.5	80	50	722.5	112	250	3672.5
17	2	16.5	49	10	142.5	81	50	772.5	113	250	3922.5
18	2	18.5	50	10	152.5	82	50	822.5	114	250	4172.5
19	2	20.5	51	10	162.5	83	50	872.5	115	250	4422.5
20	2	22.5	52	10	172.5	84	50	922.5	116	250	4672.5
21	2	24.5	53	10	182.5	85	50	972.5	117	250	4922.5
22	2	26.5	54	10	192.5	86	50	1022.5	118	250	5172.5
23	3	28.5	55	15	202.5	87	75	1072.5	119	375	5422.5
24	3	31.5	56	15	217.5	88	75	1147.5	120	375	5797.5
25	3	34.5	57	15	232.5	89	75	1222.5	121	375	6172.5
26	3	37.5	58	15	247.5	90	75	1297.5	122	375	6547.5
27	4	40.5	59	20	262.5	91	100	1372.5	123	500	6922.5
28	4	44.5	60	20	282.5	92	100	1472.5	124	500	7422.5
29	4	48.5	61	20	302.5	93	100	1572.5	125	500	7922.5
30	5	52.5	62	25	322.5	94	125	1672.5	126	625	8422.5
31	5	57.5	63	25	347.5	95	125	1797.5	127	625	9047.5

Bin Size and Charge are in fC, for HB 1fC ≈ 0.3Gev
Charge – minimum charge for the bin (low threshold)
• - These codes never occur, if charge is less than 62.5 fC
we see code 31 and never see codes 32,33,64,65,96,97
If there is an occasional fluctuation at the range #1 we might see code 0.
In this table assumption is that pedestal is in bin 2 (code 1), which is probably close to what the ASIC developer is trying to achieve.

CALCULATIONAL DETAILS

- **Double pions (back-to-back) with $P_T = 30$ GeV, $|\eta| < 3$.**
  - **fz-files with CMSIM 120 @ FNAL**

- **1000 ev. digitized in various ways in a private Objy database with ORCA_4_4_0.**

- **Hcal:TakeGeantHitTime = 0/1**
- **Hcal:doADC = 0/1**
- **Hcal:FADCcalibration_HB1 = 0.004**
  ...
- **Hcal:FADCcalibration_HF3 = 0.004**

Calibration coefficient :

$$\frac{\text{GEANT hit energy}}{\text{1 fC of ADC}}$$

The first ADC bin(s) size corresponds to 1 femtoCoulomb

- **Hcal:baseline = 0.004 - changed (default = 0.3)**

Baseline : a pedestal around which a noise is generated. Expressed (as a noise) in GEANT hit energy. Intended to reflect an electronics (ADC) pedestal. Value of 0.004 corresponds to 2-d ADC channel.

"standard"
- **Hcal:noise = 0.0006**
- **Hcal:threshold = 0.3**
- **HcalTrigPrim:Threshold = 0.3**

- **No corrections applied on L1/2 jets**

SINGLE PIONS in ORCA w/wo QUANTIZATION (I)

HCAL RecHits

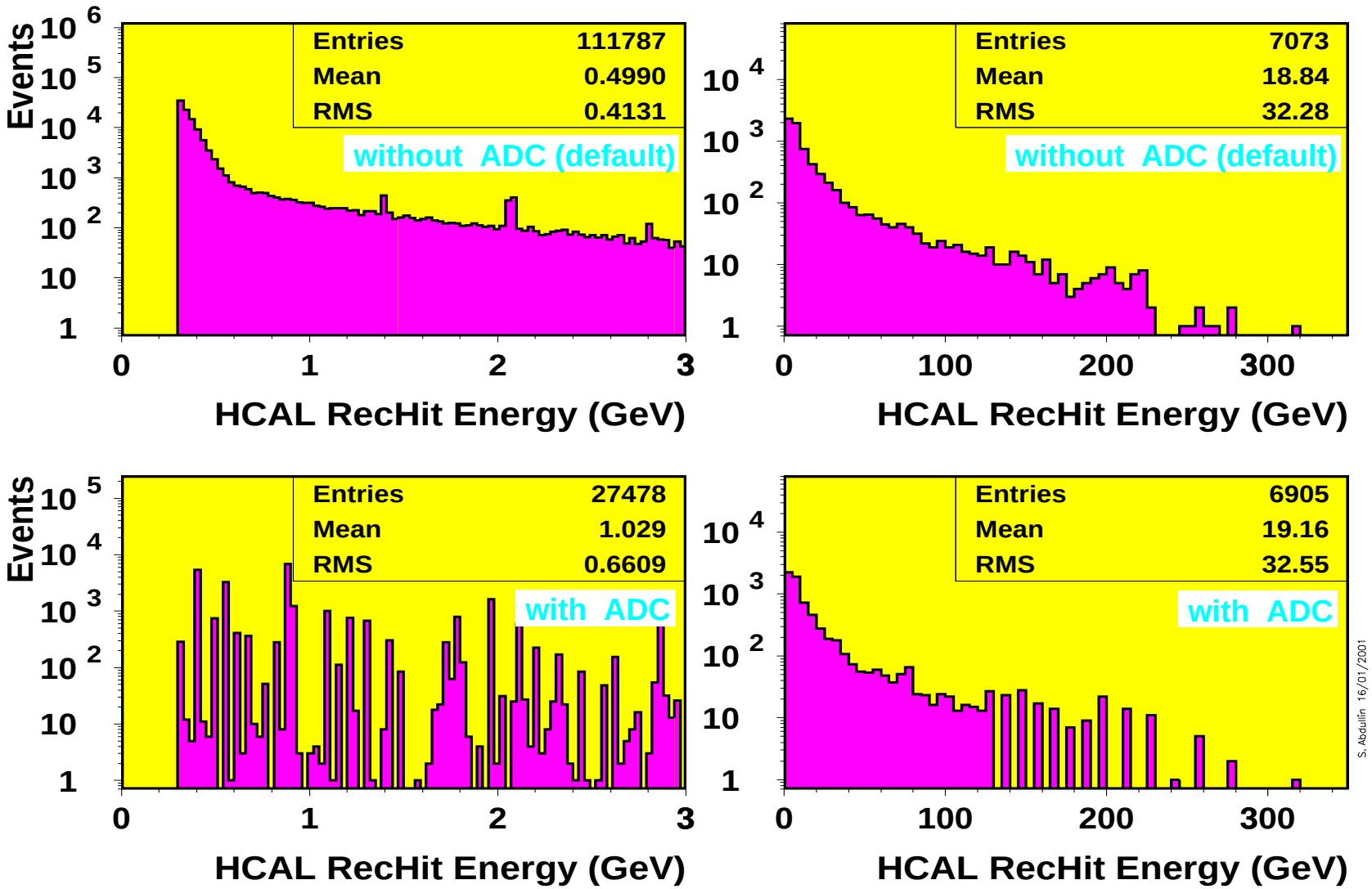

SINGLE PIONS in ORCA w/wo QUANTIZATION (II)

Jets

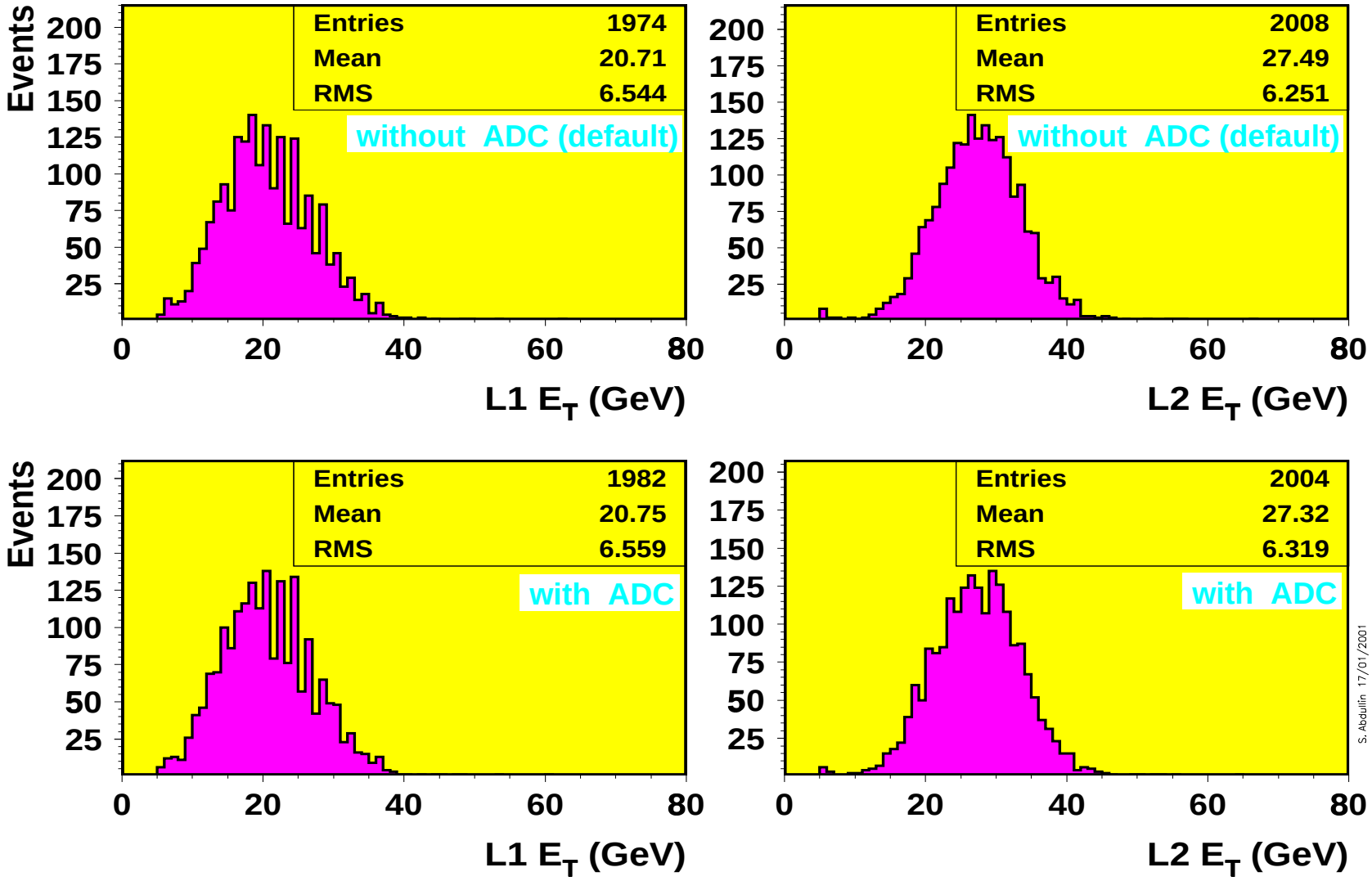

SINGLE PIONS in ORCA w/wo HCAL GEANT HIT TIME (I)

HCAL RecHits

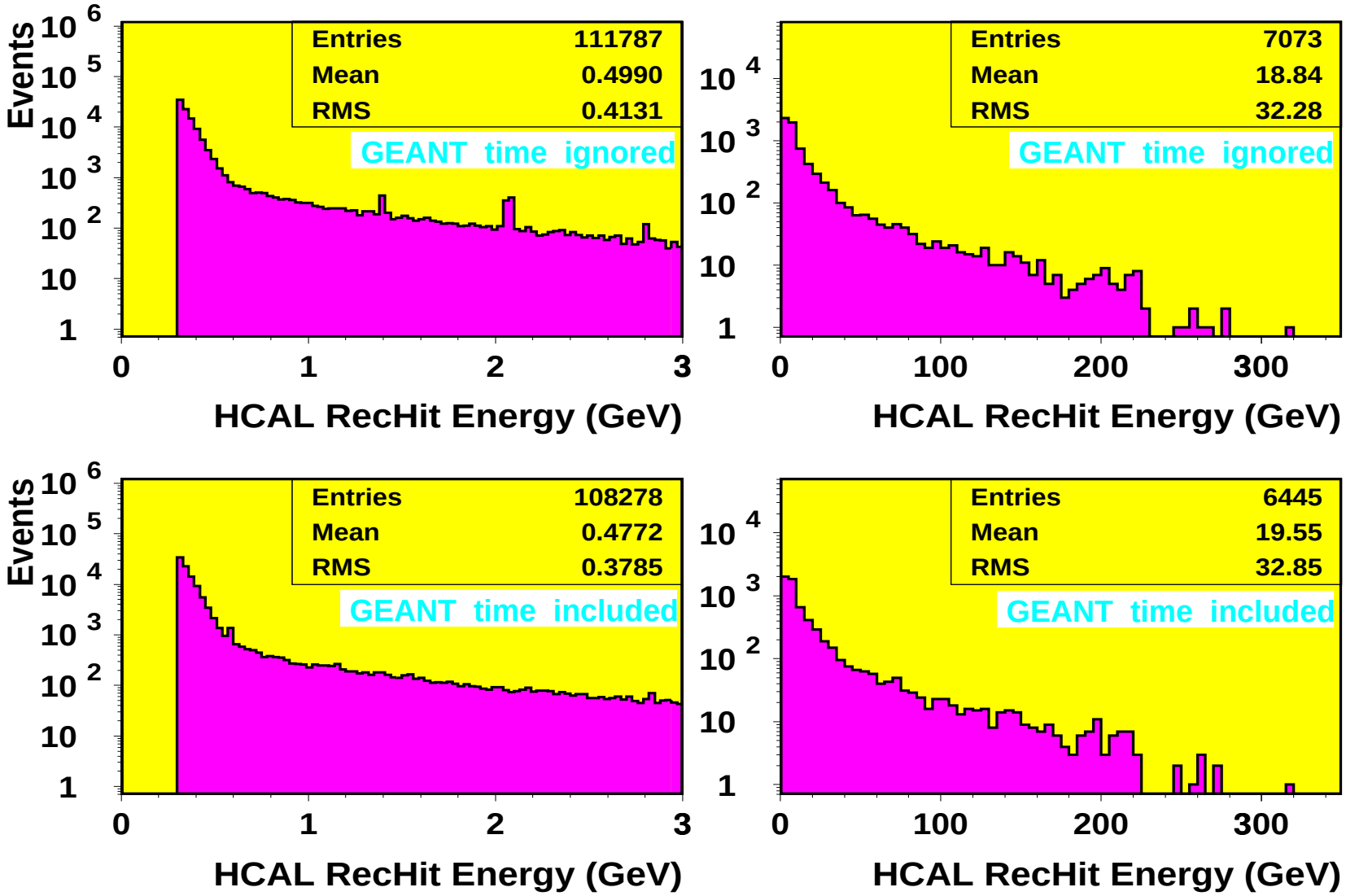

S. Abdullin 17/01/2001

SINGLE PIONS in ORCA w/wo HCAL GEANT HIT TIME (II)
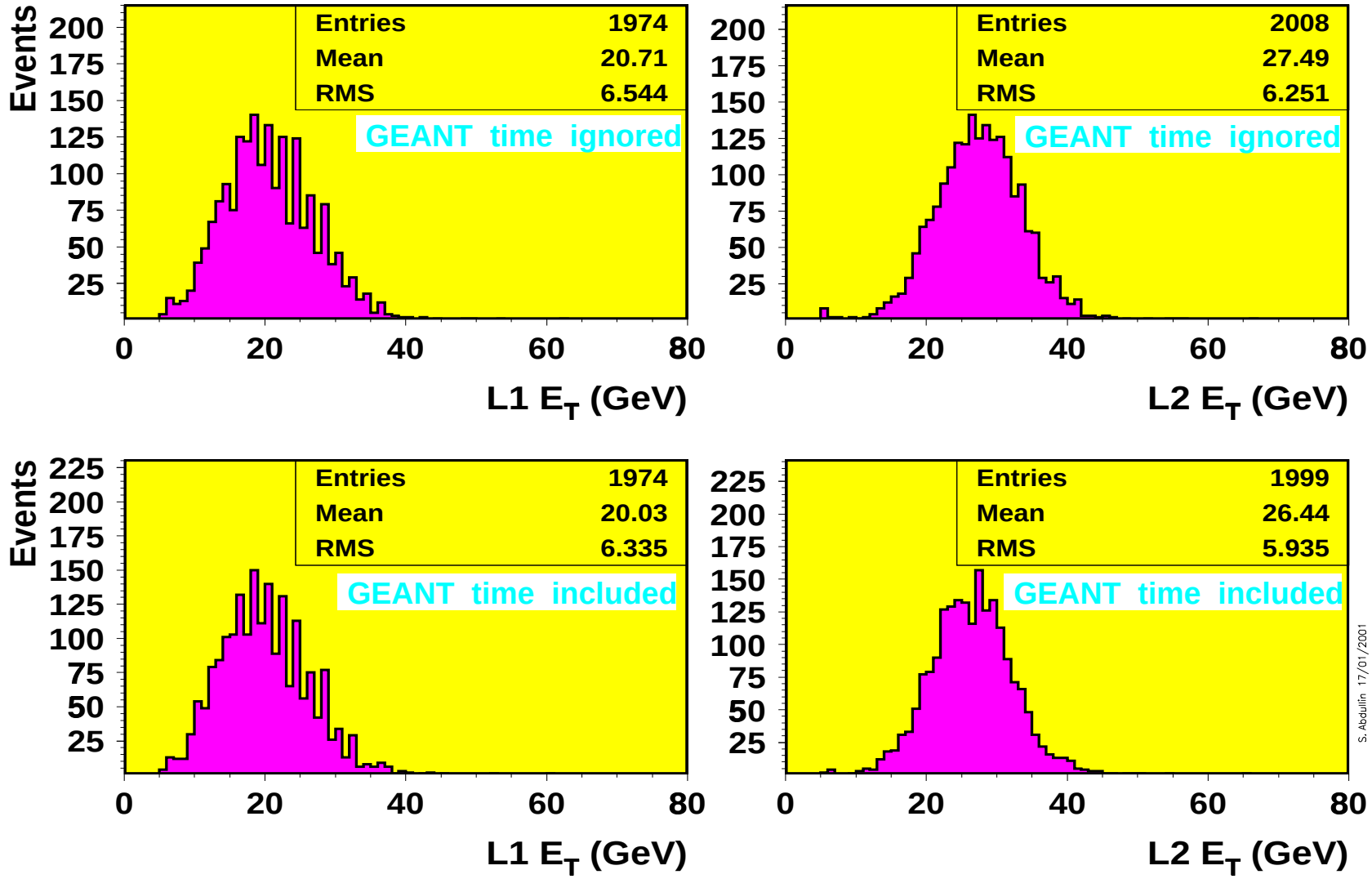
Jets