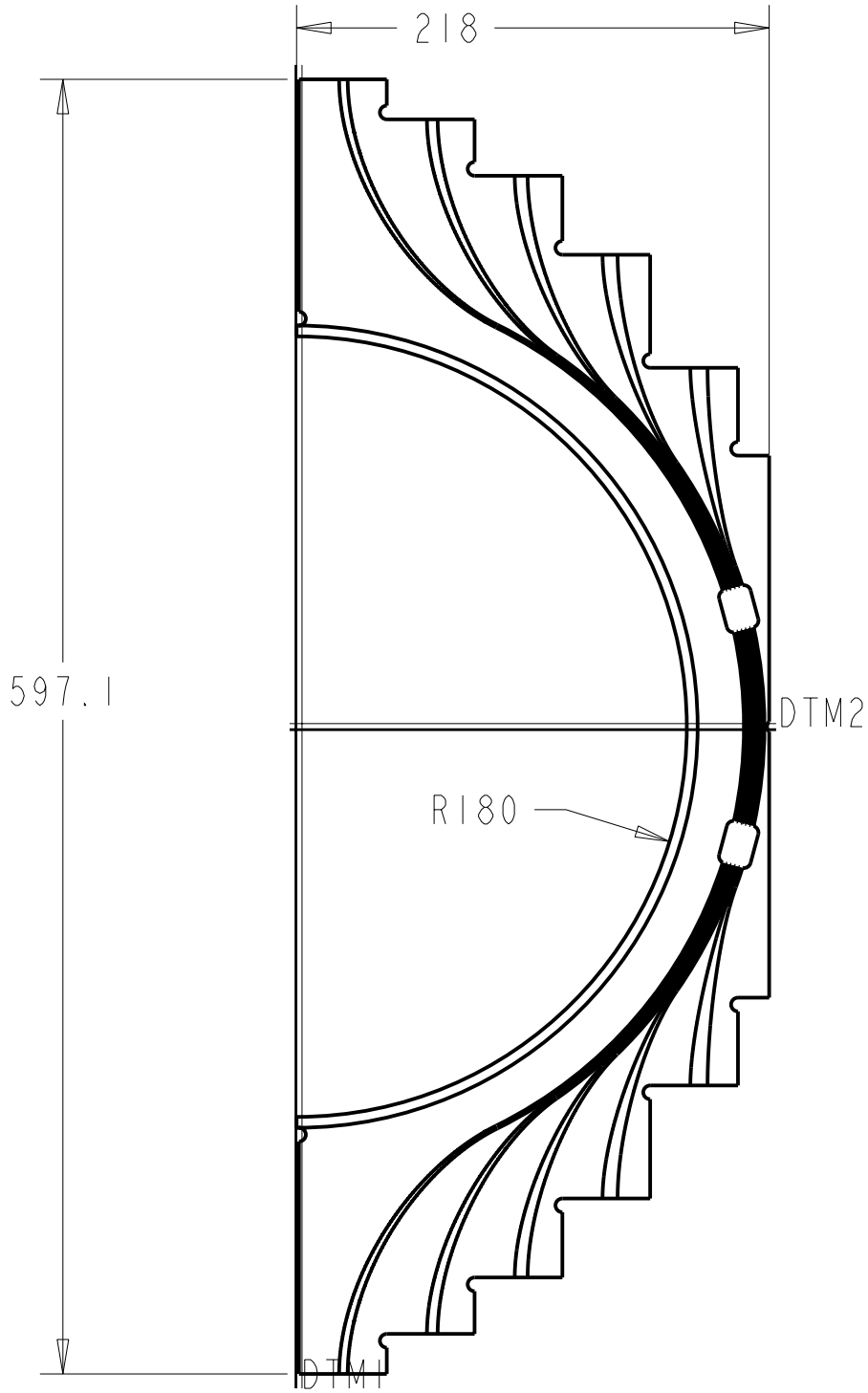

REV.	DESCRIPTION	DATE

ITEM NO	DRAWING NO	PART NAME

PARTS LIST

TOLERANCES		ORIGINATOR	Rajiv Shivane	14-Jul-99
.X	±--	DRAWN BY	Rajiv Shivane	14-Jul-99
.XX	±--	CHECKED		
.XXX	±--	APPROVED		
ANGLES	±0.5°	USED ON :		

Main Injector Neutrino Oscillation Search

UNIVERSITY OF MINNESOTA

Magnet-Hole Bypass

Finish	Model Type: PART	Model File Name: OPTBYPASS	Drawing File Name: OPTBYPASS	
	Scale 0.300:1	Drawing Number XXXXXXXX	Revision -	Sheet 1 of 5
	All dimensions are in mm unless specified otherwise			

REV.	DESCRIPTION	DATE

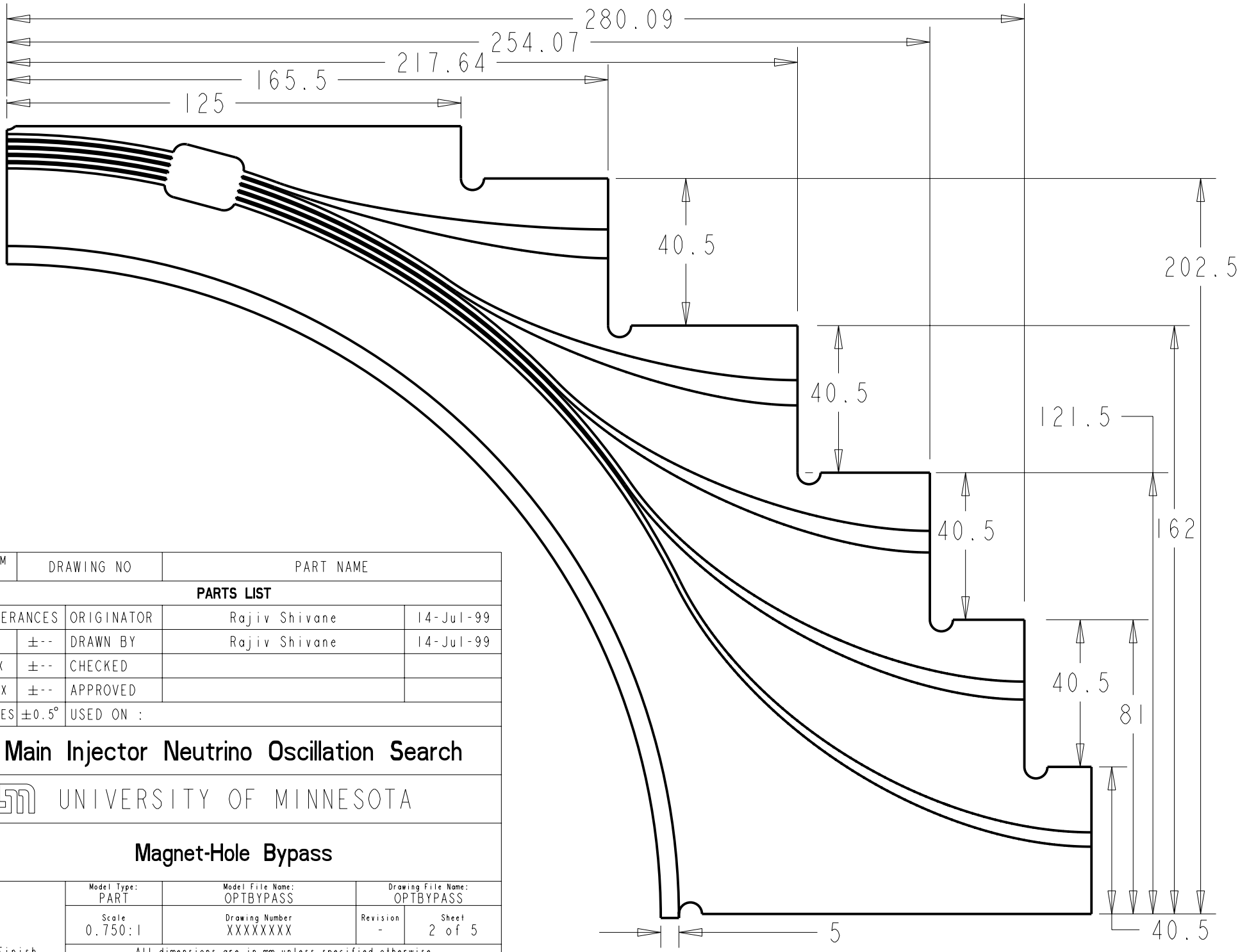

ITEM NO	DRAWING NO	PART NAME	
PARTS LIST			
TOLERANCES	ORIGINATOR	Rajiv Shivane	14-Jul-99
.X ±--	DRAWN BY	Rajiv Shivane	14-Jul-99
.XX ±--	CHECKED		
.XXX ±--	APPROVED		
ANGLES ±0.5°	USED ON :		

Main Injector Neutrino Oscillation Search

UNIVERSITY OF MINNESOTA

Magnet-Hole Bypass

	Model Type: PART	Model File Name: OPTBYPASS	Drawing File Name: OPTBYPASS	
	Scale 0.750:1	Drawing Number XXXXXXXX	Revision -	Sheet 2 of 5
Finish	All dimensions are in mm unless specified otherwise			

REV.	DESCRIPTION	DATE

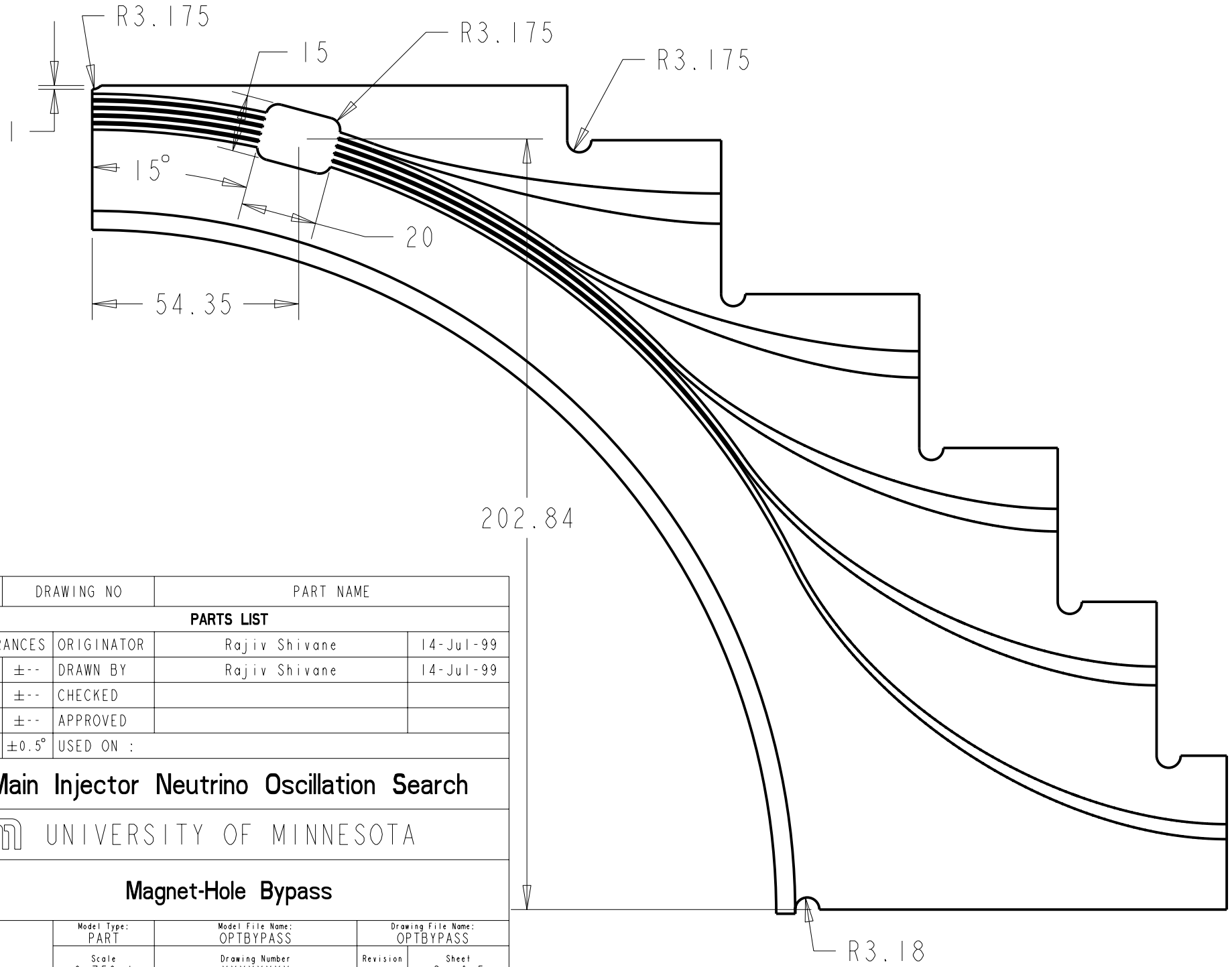

ITEM NO	DRAWING NO	PART NAME	
PARTS LIST			
TOLERANCES	ORIGINATOR	Rajiv Shivane	14-Jul-99
.X ±--	DRAWN BY	Rajiv Shivane	14-Jul-99
.XX ±--	CHECKED		
.XXX ±--	APPROVED		
ANGLES ±0.5°	USED ON :		

Main Injector Neutrino Oscillation Search

UNIVERSITY OF MINNESOTA

Magnet-Hole Bypass

Finish	Model Type: PART	Model File Name: OPTBYPASS	Drawing File Name: OPTBYPASS
	Scale 0.750:1	Drawing Number XXXXXXXX	Revision - / Sheet 3 of 5
	All dimensions are in mm unless specified otherwise		

REV	DESCRIPTION	DATE

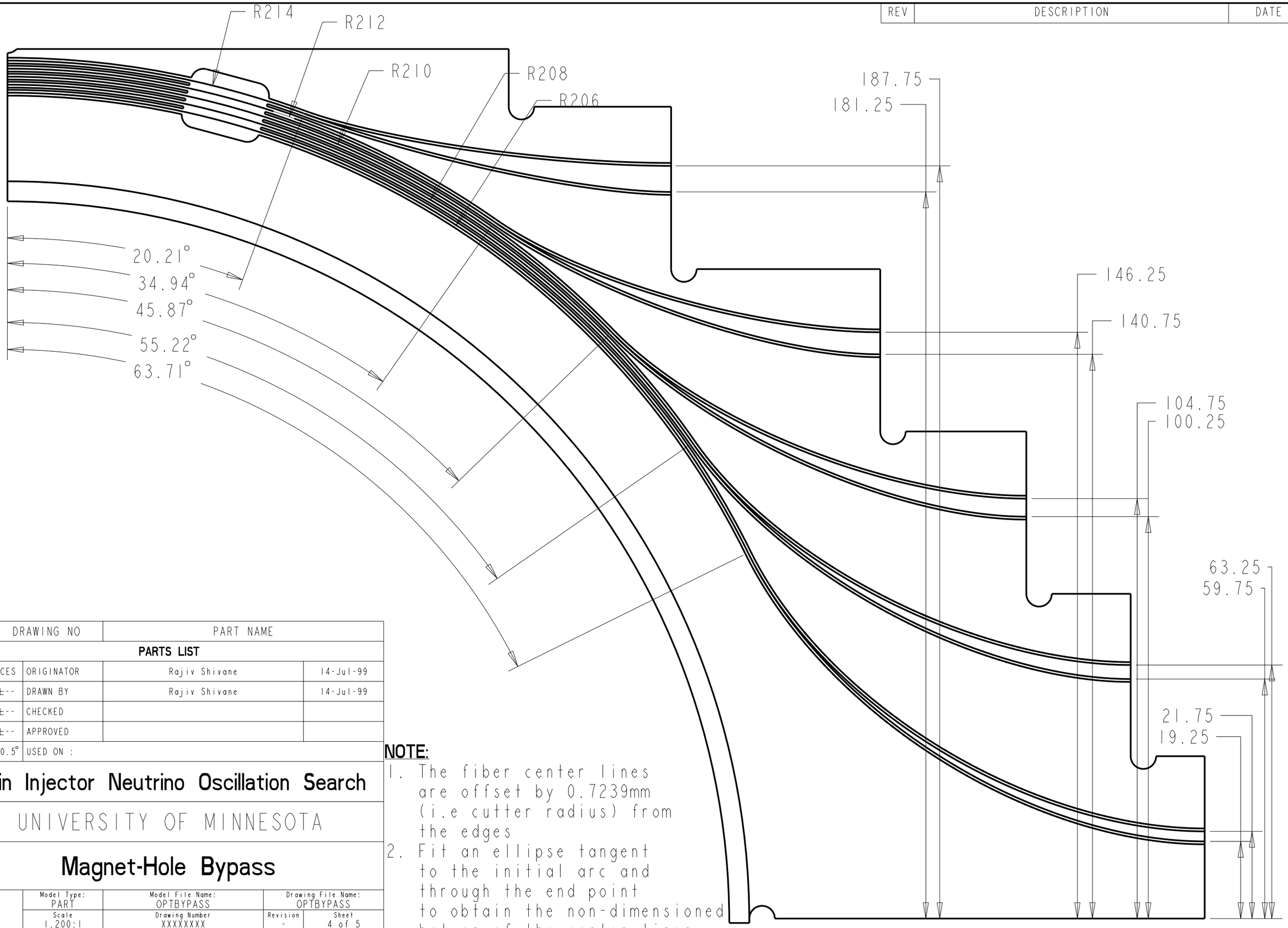

ITEM NO	DRAWING NO	PART NAME
	PARTS LIST	

TOLERANCES		ORIGINATOR	Rajiv Shivane	14-Jul-99
.X	±--	DRAWN BY	Rajiv Shivane	14-Jul-99
.XX	±--	CHECKED		
.XXX	±--	APPROVED		
Angles	±0.5°	USED ON :		

Main Injector Neutrino Oscillation Search

UNIVERSITY OF MINNESOTA

Magnet-Hole Bypass

	Model Type: PART	Model File Name: OPTBYPASS	Drawing File Name: OPTBYPASS	
	Scale 1.200:1	Drawing Number XXXXXXXX	Revision -	Sheet 4 of 5
Finish	All dimensions are in mm unless specified otherwise			

NOTE:

1. The fiber center lines are offset by 0.7239mm (i.e cutter radius) from the edges
2. Fit an ellipse tangent to the initial arc and through the end point to obtain the non-dimensioned halves of the center lines

REV.	DESCRIPTION	DATE

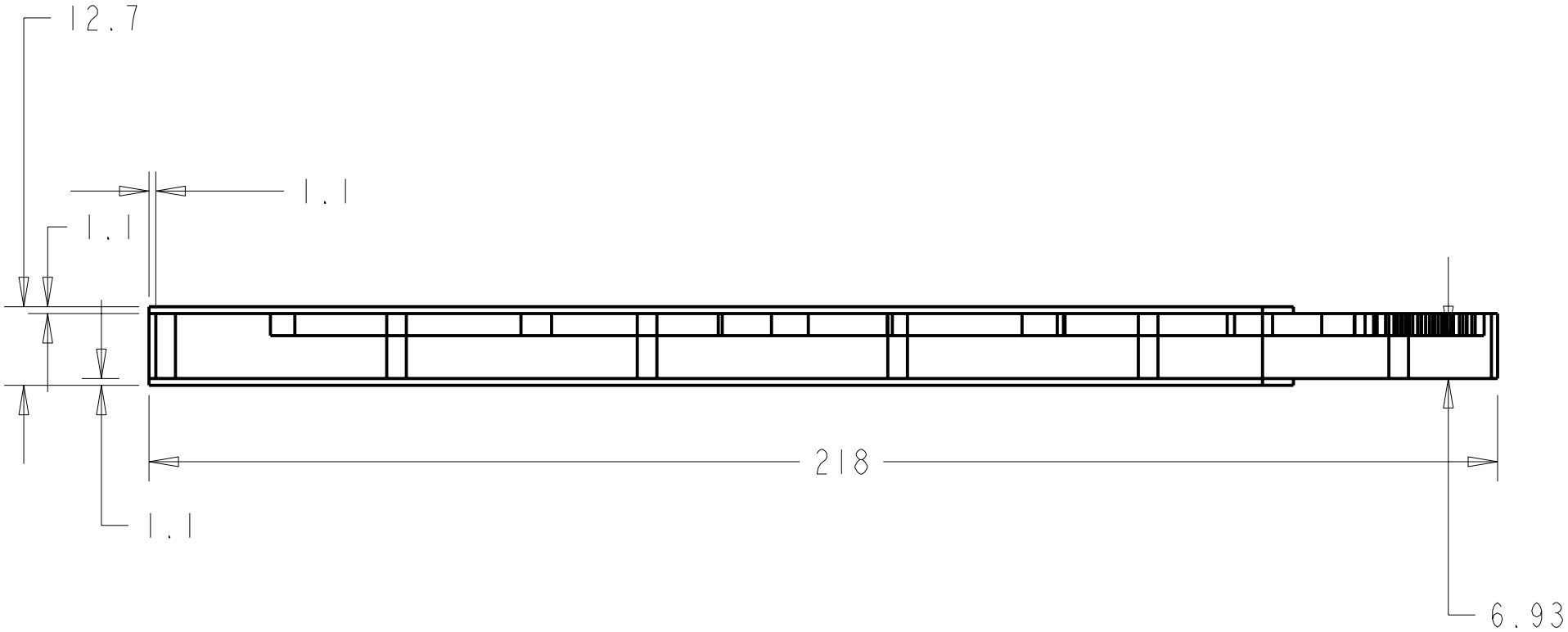

ITEM NO	DRAWING NO	PART NAME	
PARTS LIST			
TOLERANCES	ORIGINATOR	Rajiv Shivane	14-Jul-99
.X ±--	DRAWN BY	Rajiv Shivane	14-Jul-99
.XX ±--	CHECKED		
.XXX ±--	APPROVED		
ANGLES ±0.5°	USED ON :		

Main Injector Neutrino Oscillation Search

UNIVERSITY OF MINNESOTA

Magnet-Hole Bypass

Finish	Model Type: PART	Model File Name: OPTBYPASS	Drawing File Name: OPTBYPASS	
	Scale 1.000:1	Drawing Number XXXXXXXX	Revision -	Sheet 5 of 5
	All dimensions are in mm unless specified otherwise			