REV.	DESCRIPTION	DATE

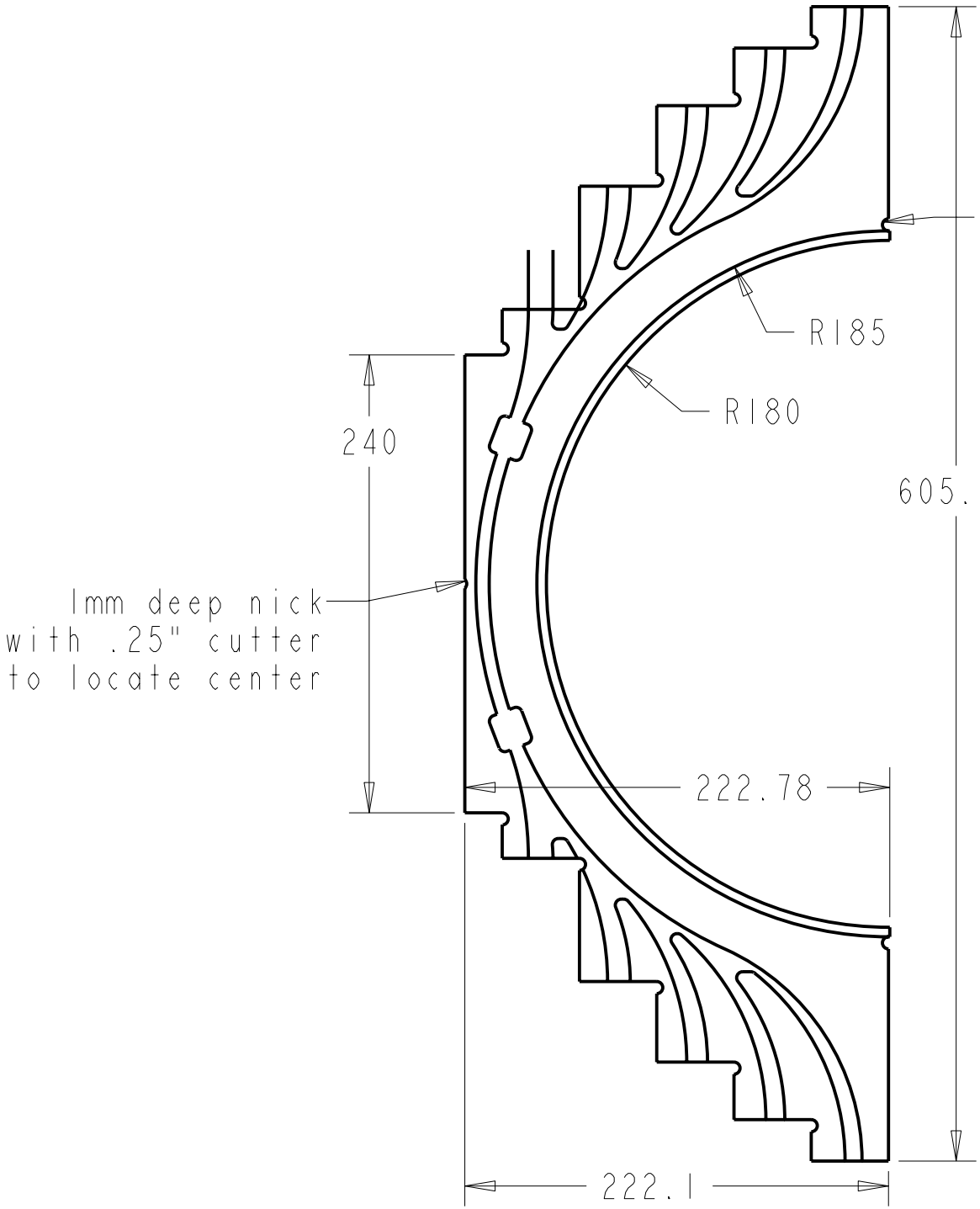

SCALE 0.300

ITEM NO	DRAWING NO	PART NAME	
PARTS LIST			
TOLERANCES	ORIGINATOR	Rajiv Shivane	20-May-99
.X ±--	DRAWN BY	Rajiv Shivane	20-May-99
.XX ±--	CHECKED		
.XXX ±--	APPROVED		
ANGLES ±0.5°	USED ON :		

Main Injector Neutrino Oscillation Search

UNIVERSITY OF MINNESOTA

Magnet coil bypass for the center modules

Model Type:	Model File Name:	Drawing File Name:	
PART	TUFTS	TUFTS	
Scale 1.000:1	Drawing Number XXXXXXXX	Revision -	Sheet 1 of 4

Finish

All dimensions are in mm unless specified otherwise