Event Builder + Level 3 for ACEs

Conor Henderson

Khaldoun Makhoul, Georgios Choudalakis

January 2007

Outline

- Introduction to the Hardware Event Builder
- Introduction to Level 3 Trigger Hardware
- Level 3 Display
- EVB/L3 ACE Control Panel
- Trouble-shooting guide
- Our helpful web-page
- The EVB/Level 3 Team
- Tour of the hardware

The Event Builder

- EventBuilder reads data 'fragments' from subdetectors via VME Read-out Buffers
- 22 EVB SCPUs, one per VME crate
- EVB event readout triggered by L2 Accept
- EVB Proxy controls the system and its interaction with RunControl

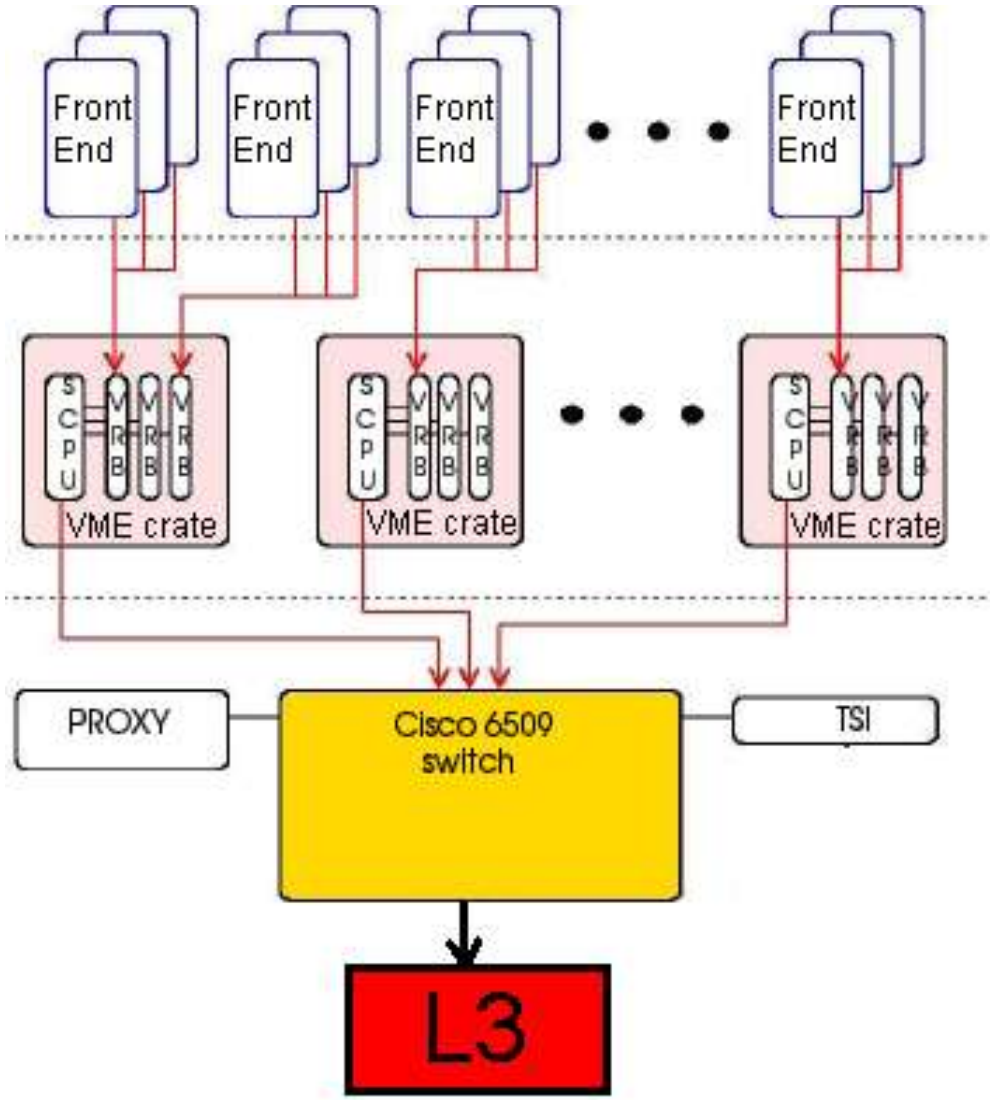

Level 3 Trigger Hardware

- Level 3 composed of regular PCs, organised into 18 independent sub-farms
- Converters receive events from EventBuilder, distribute to Processor nodes
- Processors run Reformatter and Filter
- Filter does offline-type reconstruction and makes Level 3 trigger decision
- Output nodes collect events that pass, send to Consumer Server Logger (CSL)
- L3Proxy controls farm and interfaces with RunControl

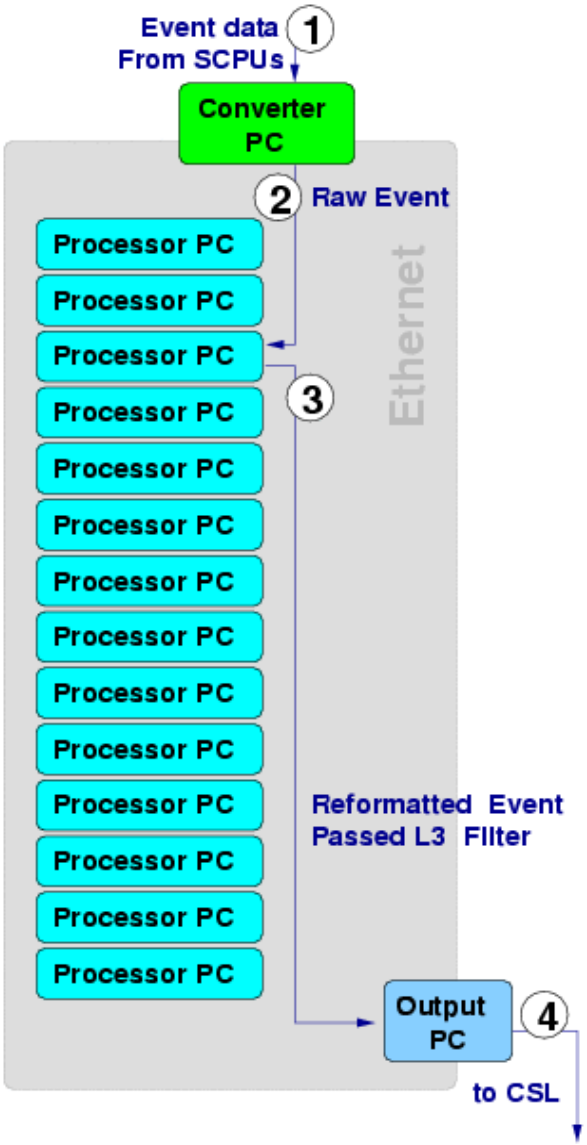

Things Not Covered Here

- The Software Event Builder
  - is used for calibrations; has limited bandwidth
  - is the responsibility of DAQ group
- Level3 Manager (l3m in RunControl)
  - determines calib files and executables for L3Filter
  - is independent of L3 hardware

The Level 3 Display

Level 3 Display

File Edit Help

Converters

c01	c02	c03	c04	c05	c06	c07	c08	c09	c10	c11	c12	c13	c14	c15	c16	c17	c18
672726	670396	670383	672405	672689	0	670897	673060	671474	670402	672893	672255	670126	670178	671996	671617	671640	673628
672679	670287	670445	672476	672604	0	670954	673067	671479	670274	672927	672287	670135	670220	672074	671667	671603	673597
20.4 Hz	20.3 Hz	20.3 Hz	19.7 Hz	20.4 Hz	0.0 Hz	20.4 Hz	20.4 Hz	20.3 Hz	20.3 Hz	20.4 Hz	20.4 Hz	20.4 Hz	20.3 Hz	20.4 Hz	20.3 Hz	20.5 Hz	20.4 Hz

Processors

s01p02	s02p01	s03p01	s04p01	s05p01	s06p01	s07p01	s08p02	s09p01	s10p01	s11p01	s12p01	s13p01	s14p01	s15p01	s16p01	s17p01	s18p01
s01p03	s02p02	s03p02	s04p02	s05p02	s06p02	s07p03	s08p03	s09p02	s10p02	s11p02	s12p02	s13p02	s14p02	s15p02	s16p02	s17p02	s18p02
s01p04	s02p03	s03p03	s04p03	s05p03	s06p03	s07p04	s08p04	s09p03	s10p03	s11p03	s12p03	s13p03	s14p03	s15p03	s16p03	s17p03	s18p03
s01p05	s02p04	s03p04	s04p04	s05p04	s06p04	s07p05	s08p05	s09p04	s10p04	s11p04	s12p04	s13p04	s14p04	s15p04	s16p04	s17p04	s18p04
s01p06	s02p05	s03p06	s04p05	s05p05	s06p05	s07p06	s08p06	s09p05	s10p05	s11p05	s12p05	s13p05	s14p05	s15p05	s16p05	s17p05	s18p05
s01p07	s02p06	s03p08	s04p06	s05p06	s06p06	s07p07	s08p07	s09p06	s10p06	s11p06	s12p06	s13p06	s14p06	s15p06	s16p06	s17p06	s18p06
s01p08	s02p07	s03p09	s04p07	s05p07	s06p07	s07p08	s08p08	s09p07	s10p07	s11p07	s12p07	s13p07	s14p07	s15p07	s16p07	s17p07	s18p07
s01p09	s02p08	s03p10	s04p08	s05p08	s06p08	s07p09	s08p09	s09p08	s10p08	s11p08	s12p08	s13p09	s14p08	s15p08	s16p08	s17p08	s18p08
s01p10	s02p09	s03p11	s04p09	s05p09	s06p09	s07p10	s08p10	s09p10	s10p09	s11p09	s12p09	s13p10	s14p09	s15p09	s16p09	s17p09	s18p09
s01p11	s02p10	s03p12	s04p10	s05p10	s06p10	s07p11	s08p11	s09p11	s10p10	s11p10	s12p10	s13p11	s14p10	s15p10	s16p10	s17p11	s18p10
s01p12	s02p11	s03p13	s04p11	s05p11	s06p11	s07p12	s08p12	s09p13	s10p11	s11p11	s12p11	s13p12	s14p11	s15p11	s16p11	s17p12	s18p11
s01p13	s02p12	s03p14	s04p12	s05p12	s06p12	s07p13	s08p13	s09p14	s10p12	s11p12	s12p13	s13p13	s14p12	s15p12	s16p12	s17p13	s18p12
s01p14	s02p13	s03p15	s04p13	s05p13	s06p13	s07p14	s08p15	s09p16	s10p13	s11p13	s12p14	s13p14	s14p13	s15p13	s16p13	s17p14	s18p13
s01p15	s02p14	s03p18	s04p14	s05p14	s06p14	s07p15	s08p16	s09p17	s10p14	s11p14	s12p15	s13p15	s14p14	s15p14	s16p14	s17p15	s18p14
s01p16	s02p15	s03p19	s04p15	s05p15	s06p15	s07p17	s08p17	s09p18	s10p15	s11p16	s12p16	s13p17	s14p15	s15p15	s16p15	s17p16	s18p15
s01p17	s02p16		s04p16	s05p16	s06p16	s07p18	s08p18	s09p19	s10p16	s11p17	s12p17	s13p18	s14p16	s15p16	s16p16	s17p17	s18p16
s01p18	s02p17		s04p17	s05p17	s06p17	s07p19	s08p19	s09p20	s10p17	s11p18	s12p18	s13p19	s14p17	s15p17	s16p17	s17p19	s18p17
s01p19	s02p18		s04p18	s05p18	s06p18	s07p20	s08p20	s09p21	s10p18	s11p19	s12p19	s13p20	s14p18	s15p18	s16p18	s17p20	s18p18
s01p20	s02p19		s04p19	s05p19	s06p19	s07p21	s08p21		s10p19	s11p20	s12p20	s13p21	s14p19	s15p19	s16p19	s17p21	s18p19
s01p21	s02p20		s04p20	s05p20	s06p20	s07p22			s10p20	s11p21	s12p21		s14p21	s15p20	s16p20		s18p20
s01p22	s02p21		s04p21	s05p21					s10p21					s15p21	s16p21		s18p21
			s04p22						s10p22					s15p22	s16p22		

Output nodes

u01	1460123	0	u02	1460765	0	u03	1308111	0	u04	1461306	0	u05	1458913	0	u06	1461106	0	u07	1457931	0	u08	1459254	0	u09	1462760	0
9.1 Hz		1.2 MB/s	8.9 Hz		1.2 MB/s	4.0 Hz		0.6 MB/s	8.2 Hz		1.1 MB/s	8.9 Hz		1.2 MB/s	8.1 Hz		1.1 MB/s	8.2 Hz		1.1 MB/s	8.1 Hz		1.0 MB/s	9.0 Hz		1.2 MB/s

	State/Transition	Phase #/out of #	Time spent
Partition 0:	Active	In state: 1/1	00:00:42
Partition 1:	Not defined	In state: 1/1	00:00:42
Partition 2:	Not defined	In state: 1/1	00:00:42
Partition 3:	Not defined	In state: 1/1	00:00:42
Partition 4:	Not defined	In state: 1/1	00:00:42
Partition 5:	Not defined	In state: 1/1	00:00:42
Partition 6:	Not defined	In state: 1/1	00:00:42
Partition 7:	Not defined	In state: 1/1	00:00:42

0 1 2 3 4 5 6 7

Level3 Summary

	Total	Inst. rate
Input	23439241	345 Hz
Reformatter rejected	0 (0.00%)	0.00 %
Filters rejected	18822514 (80.30%)	----------
Severe filter errors	0 (0.00%)	----------
Output	4618430	72 Hz

Last heartbeat:	Sat Aug 19, 14:26:55 2006
Current time:	Sat Aug 19, 14:26:57 2006

Start it from DAQMon

Level3 Display In Action

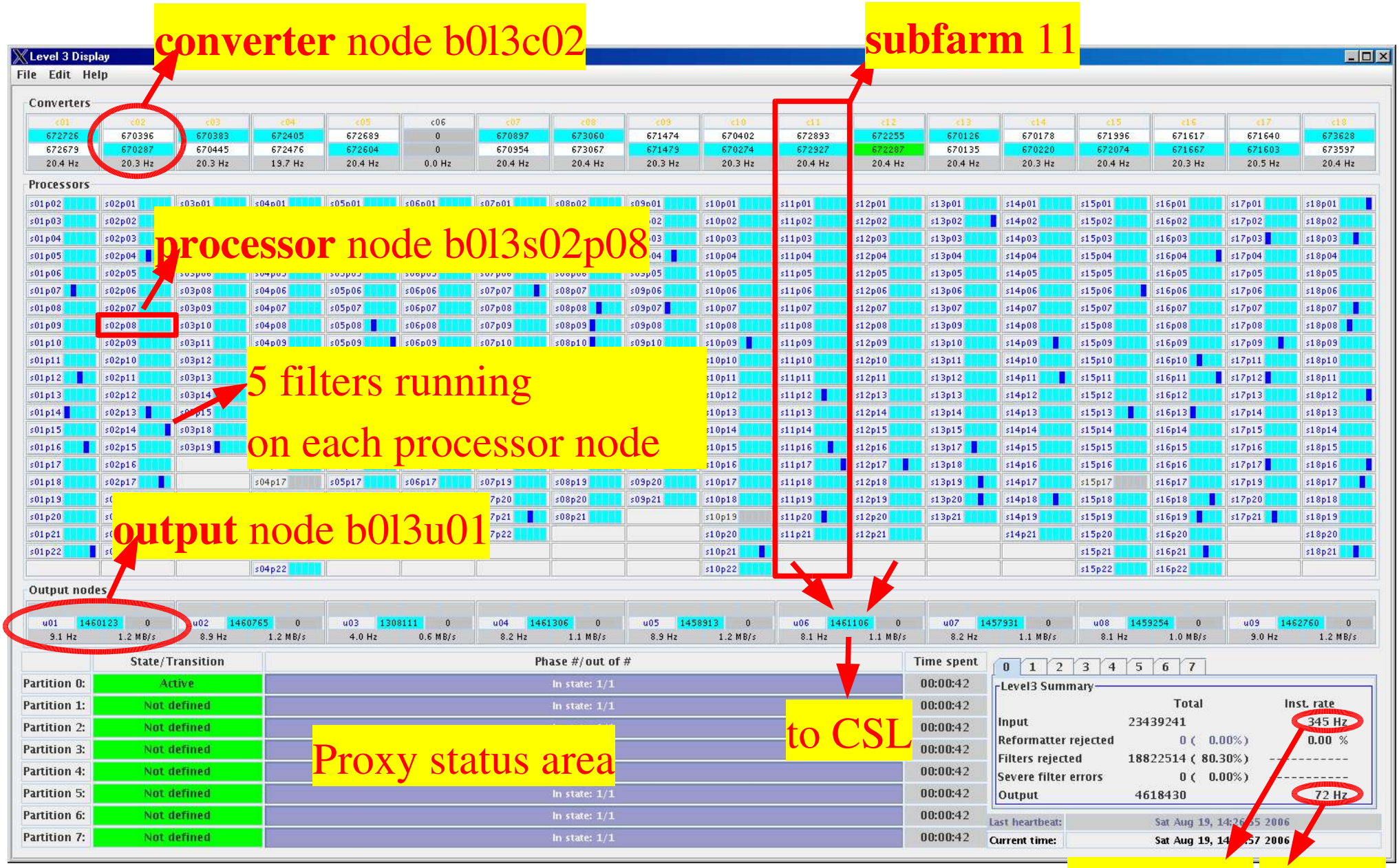

The EVB/L3 ACE Control Panel

To start: > Evb2Control

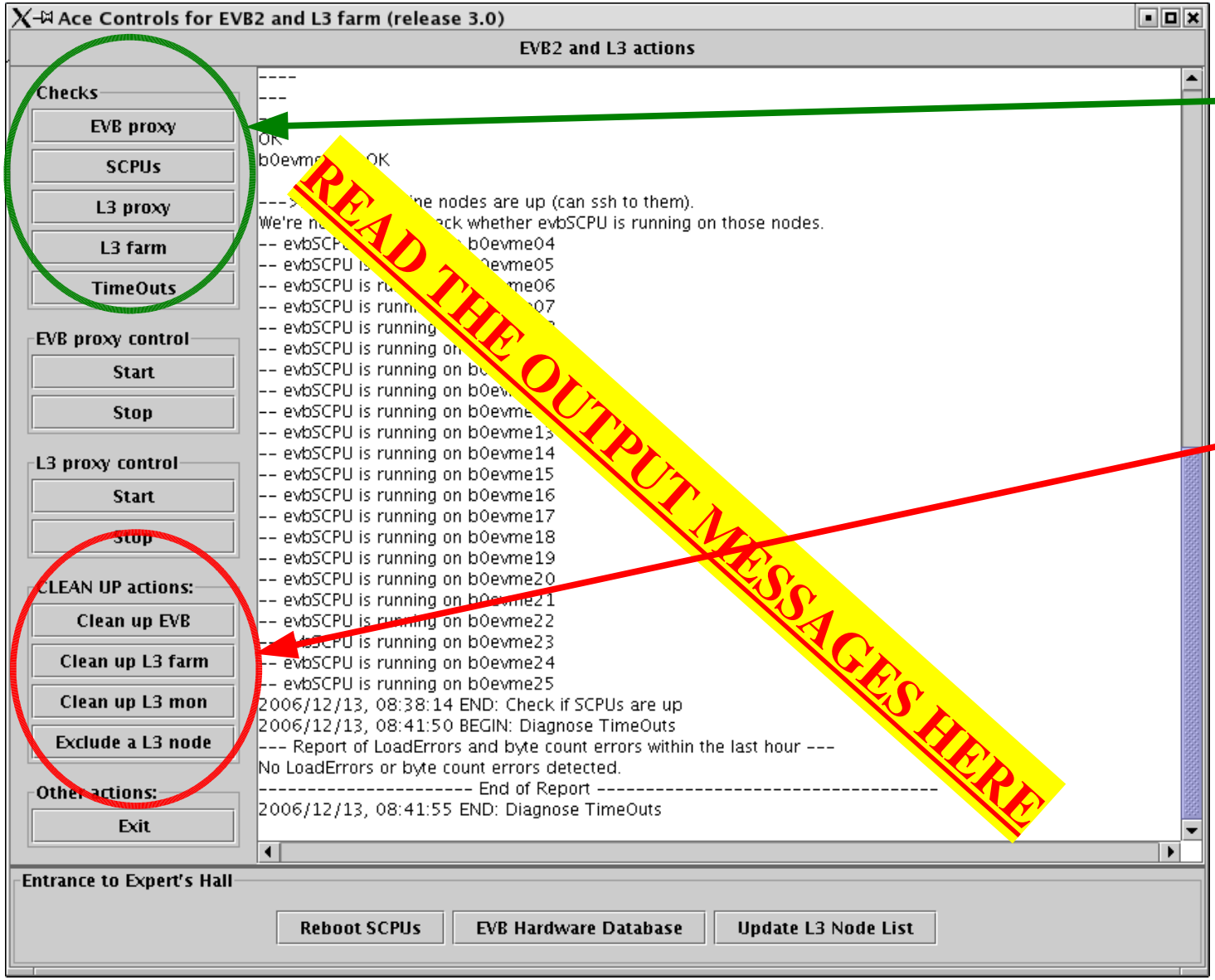

- *Checks* are safe – can do any time
- *Clean-up* can only be done in 'Start' state

Golden Rules for Smooth Operation

- If in doubt, page the Expert
- Always RESET after ENDing or ABORTing a run
- Do not shepherd EVB or L3
  - Evb and L3 must be synchronised with other clients
- Read our webpage – we have instructions for common problems that may occur
- Contact us if you have questions

Things You May Encounter

- 'Busy Time-Out' or 'TM2 Events Pending TO'
- EVB fails to respond to a transition
- Level 3 fails a transition
- 'Level3 Relay failure'

- All these (and more) are covered on our webpage
- If a problem develops with EVB or Level3, please consult the webpage to seek a solution

The EVB/Level3 ACE Webpage

Linked from the DAQ ACE Help-Page

Hardware Event Builder and Level 3 Farm

RULE 1 - If you are in doubt and risk downtime from EVB/L3: page EVB/L3
RULE 2 - Go to START state before: new run including EVB/L3 or "Clean up EVB" or "Clean up L3 farm"

Getting Started | Troubleshooting | Documents | Contact

- How to start the Ace Control Panel for EVB/L3
- How to start the Level 3 monitoring display
- Location of SCPUs and the reset button

Contains useful information and trouble-shooting guide

The EVB/L3 Team

- Conor Henderson (SPL)
- Khaldoun Makhoul
- Georgios Choudalakis

- The EVB/L3 Main Pager:

  630-722-7579

- http://www-cdfonline.fnal.gov/ops/evbl3shift/evbl3shift.html