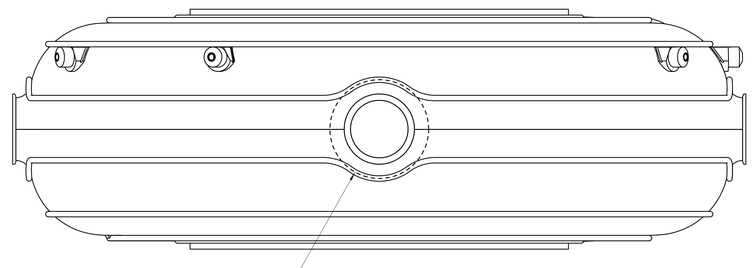

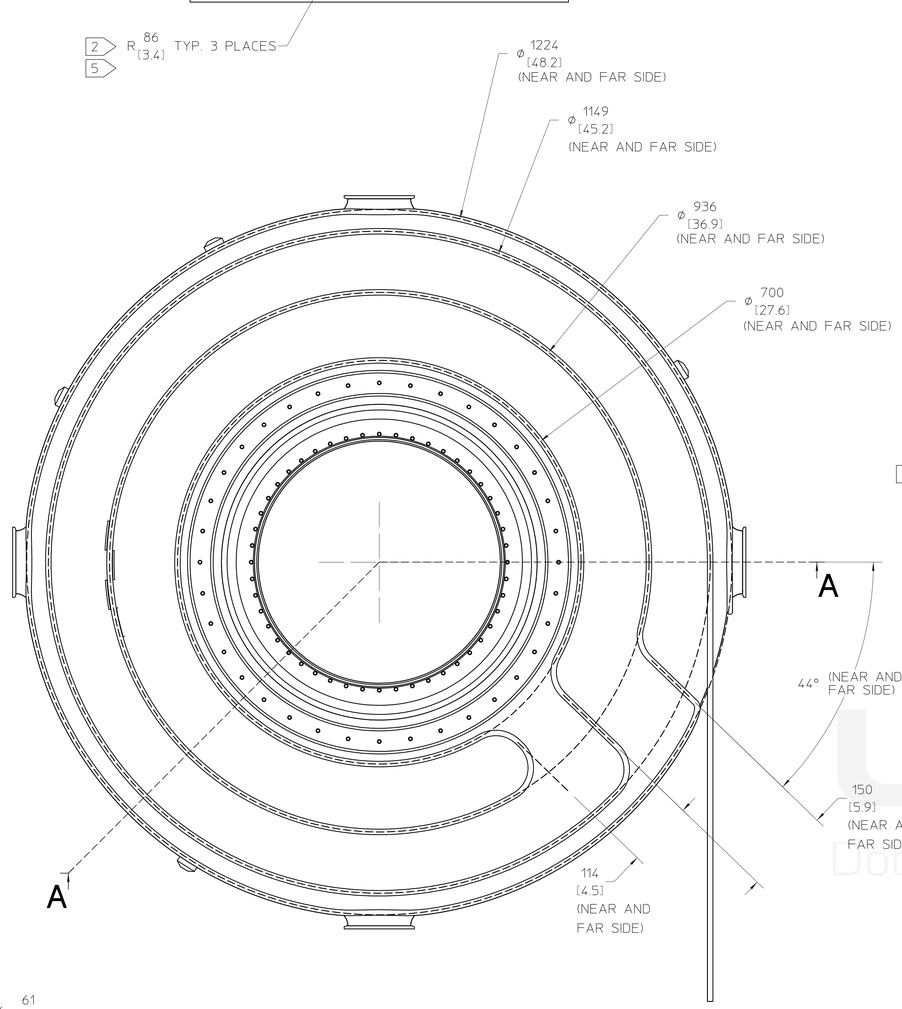

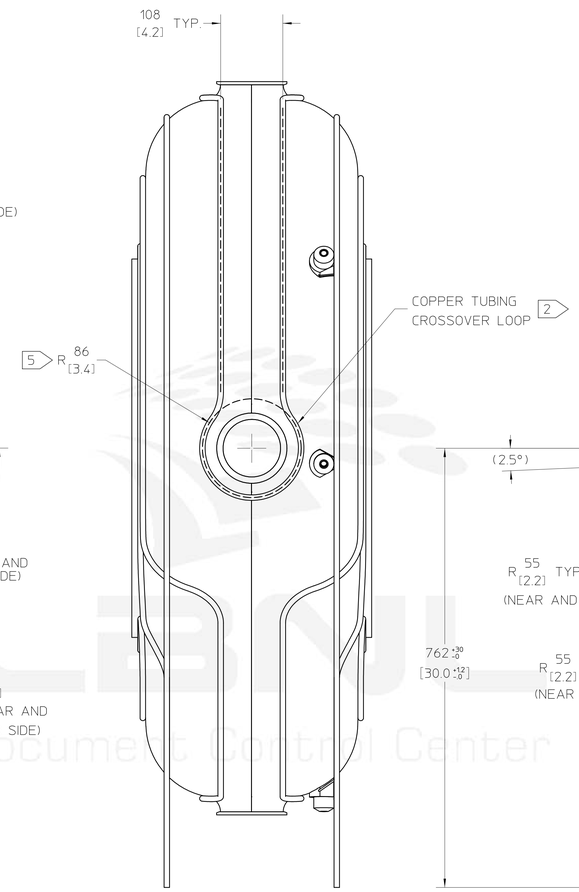

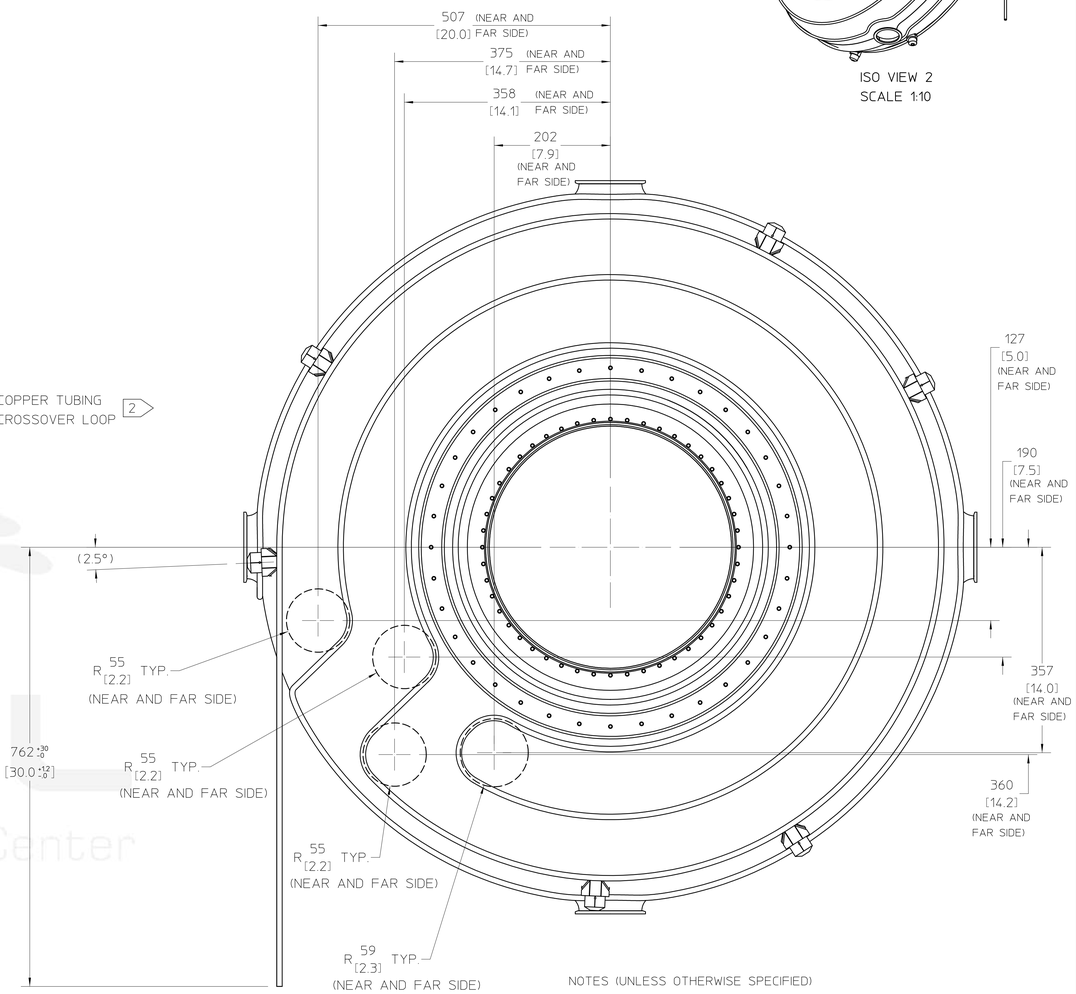

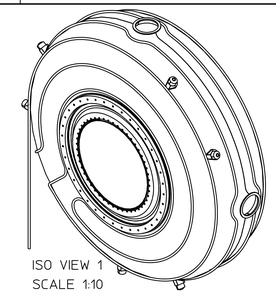

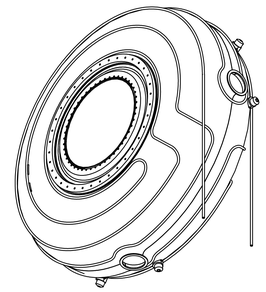

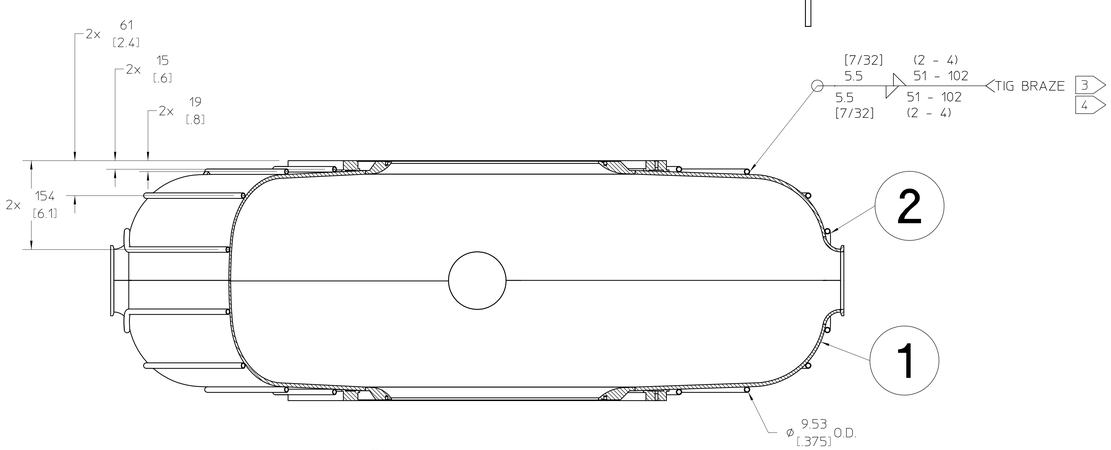

Section A–A

NOTES (UNLESS OTHERWISE SPECIFIED)

1. ALL DIMENSIONS ARE IN MILLIMETERS UNLESS OTHERWISE NOTED. (DIMENSION IN PARENTHESIS ARE IN INCHES)
2. ITEM 2 SHALL BE ONE CONTINUOUS LENGTH OF COPPER TUBING. NO JOINTS ALLOWED.
3. COOLING TUBE SHALL BE TUNGSTEN INERT GAS (TIG) BRAZED ONTO THE SURFACE OF THE CAVITY.
4. FILLER MATERIAL: BRAZE 604
5. ALL DIMENSIONS OF TUBING ARE TO CENTERLINES.
6. ANSI/AWS A2.4 'Standard Symbols for Welding, Brazing and Nondestructive Examination'
7. PROTECT THE CAVITY INNER SURFACE FROM ALL DAMAGE. TAKE CARE NOT TO DING, SCRATCH, DENT, OR OTHERWISE MARK ANY PORTION OF THE CAVITY INNER SURFACE.
8. PROTECT FINISHED SEALING SURFACES FROM ALL DAMAGE. TAKE CARE NOT TO DING, SCRATCH, DENT, OR OTHERWISE MARK ANY MACHINED SURFACE.
9. THIS IS A VACUUM COMPONENT AND REQUIRES SPECIAL ATTENTION TO AVOID CONTAMINATION, REFER TO LBNL ENGINEERING SPECIFICATION #10156 BEFORE PERFORMING ANY FABRICATION PROCEDURES.
10. ALL HIDDEN LINES MAY NOT BE SHOWN.

REQD	ITEM	PART NO.	DESCRIPTION
1	2	-	1/4 INCH SIZE, ANNEALED TEMPER, COPPER TUBING, 0.375 INCH O.D. x 0.245 I.D. AND 0.065 INCH WALL THICKNESS - (McMaster-Carr #8955K26 or Equivalent)
1	1	26L212	E-BEAM WELD STRUT POSTS TO RF CAVITY

REV	AUTHOR	APPROVER	DATE	CHANGE DESCRIPTION
A	ajdemell	spvirost	01-08-09	INITIAL REVISION

UNLESS OTHERWISE SPECIFIED
TOLERANCES: .X ± .5 .XX ± .25 .XXX ± .127
NON DECIMAL: ± 5mm
ANGLES: ± 1.0°/25mm
MACH. SURFS.: 1.6 OR BETTER
REF ASME Y14.5M-1994, THREADS ARE CLASS 2
BREAK EDGES 0.40 MAX. ON MACHINED WORK
REMOVE BURRS, WELD SPLATTER & LOOSE SCALE

PROJECT NAME: MICE
UNIQUE NUMBER: MU-0001-5984
DO NOT SCALE PRINT
SCALE: 1 : 4
CATEGORY CODE: MU1020
THIRD ANGLE PROJECTION

ERNEST ORLANDO LAWRENCE BERKELEY NATIONAL LABORATORY
UNIVERSITY OF CALIFORNIA
MUON IONIZATION COOLING EXPT. (MICE)
MICE - RF & COUPLING COIL MODULE
TIG BRAZE COOLING TUBING, OUTER RF CAVITY
SHEET 1 OF 1 SIZE: E DWG NO: 26L220 REV A

Downloaded by: Allan J DeMello at April 28, 2009 08:09:13
Officially Released to the LBNL Document Control Center
Released: January 8th, 2009 DCC Auth Key: KONWFNRBP6
AUTO GENERATED PDF Jan 09 2009 8:14:13 PST