DESCRIPTION: PLATE, FLUX RETURN TOP/BOTTOM
CATEGORY: MAGNET PROJECT: ProjectXInjectorExperiment

REV	REVISION CONTROL DOCUMENT	DATES	SIGNATURES	
-	F10001618---RCD		DRAWN	
			APPROVED	

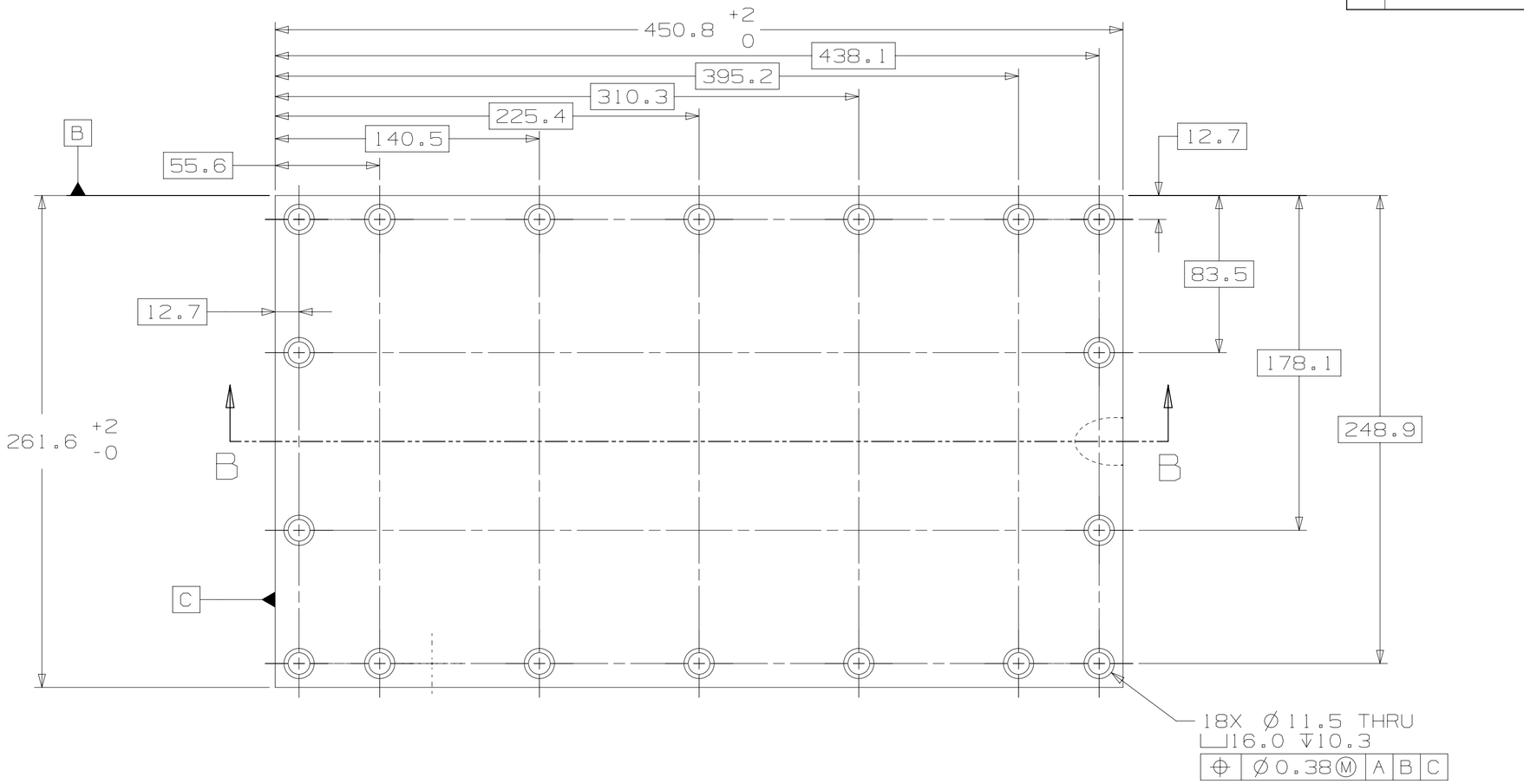

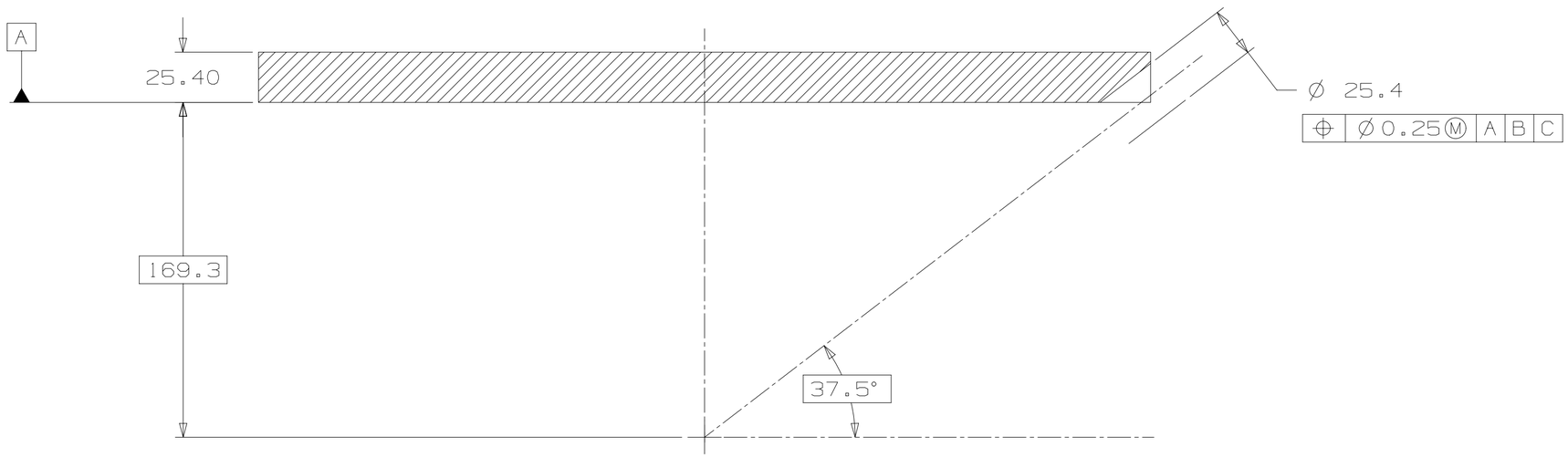

SECTION B - B

NOTES (UNLESS OTHERWISE SPECIFIED):

1. PART MUST BE FREE OF DIRT, GREASE, OIL & CHIPS.
2. PART TO BE FREE OF ALL SHARP EDGES, CORNERS, AND BURRS.
3. TRAILING ZEROS ON DIMENSIONS DENOTE TOLRANCE.

UNLESS OTHERWISE SPECIFIED				
±X	±X.X	±X.XX	±X/X	±X°
--	0.3	0.12	N/A	1°

BREAK ALL SHARP EDGES .015 MAX.
DO NOT SCALE DRAWING
DIMENSIONS BASED ON ASME Y14.5M-1994
MAX. ALL MACH SURFACES 3.2
DRAWING UNITS: MM

DRAWN	N.TANOVIC	DATE	31-Jul-2012
CHECKED		DATE	
APPROVED		DATE	
USED ON	F10002129		
MATERIAL	ASTM A36 STEEL, UNS K02600		
GROUP: Technical Division Design and Drafting		CAGE CODE: 0U5R6	

FERMI NATIONAL ACCELERATOR LABORATORY
UNITED STATES DEPARTMENT OF ENERGY

NAME: PLATE, FLUX RETURN TOP/BOTTOM

SCALE	SIZE	DRAWING NUMBER	SHEET	REV
1:2 AS SHOWN	A2	F10001618	1 OF 1	-