DESCRIPTION: POLES
CATEGORY: POLE PROJECT: ProjectXInjectorExperiment

REV	REVISION CONTROL DOCUMENT	DATES	SIGNATURES	
-	F10001620---RCD		DRAWN	
			APPROVED	

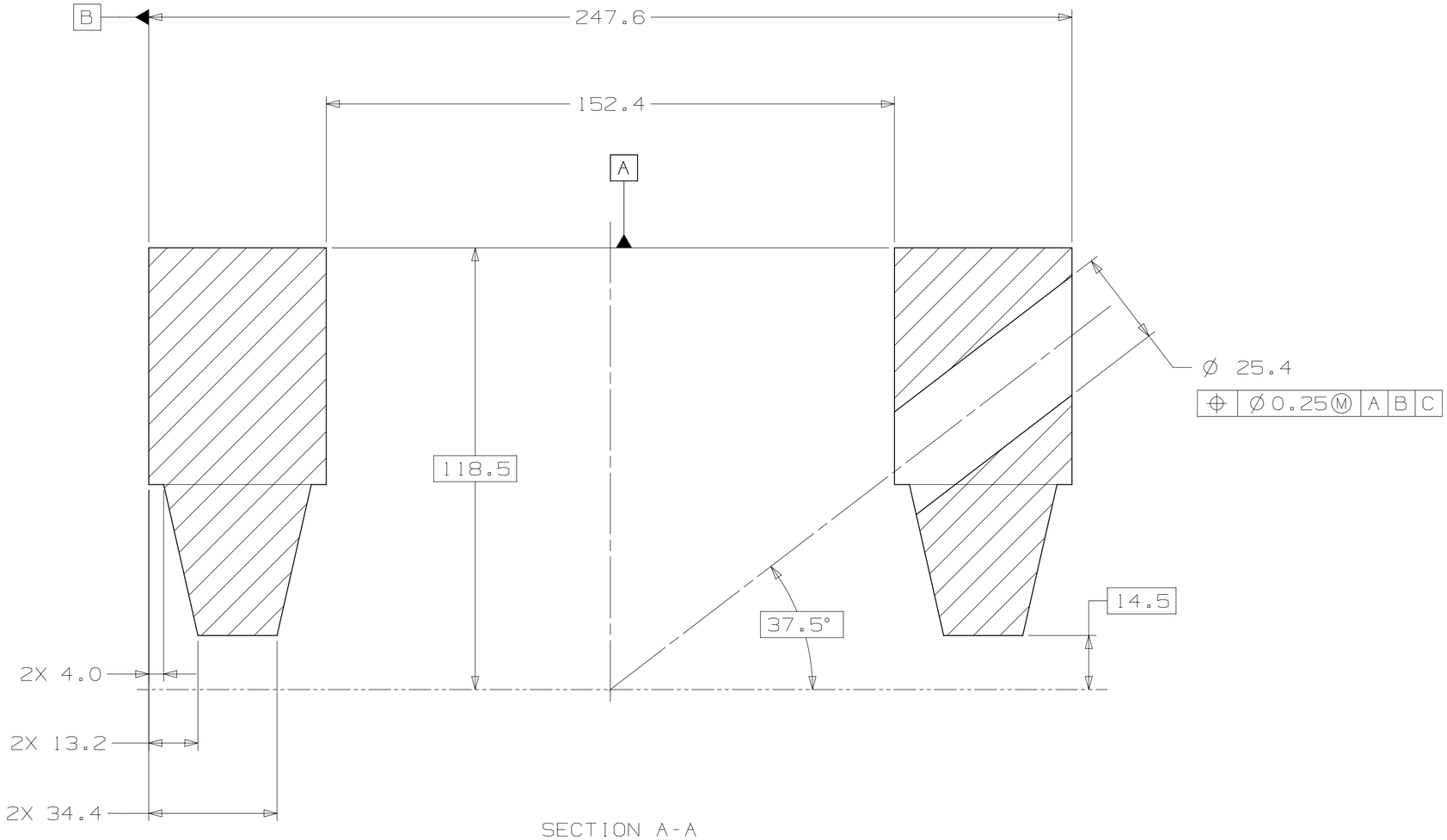

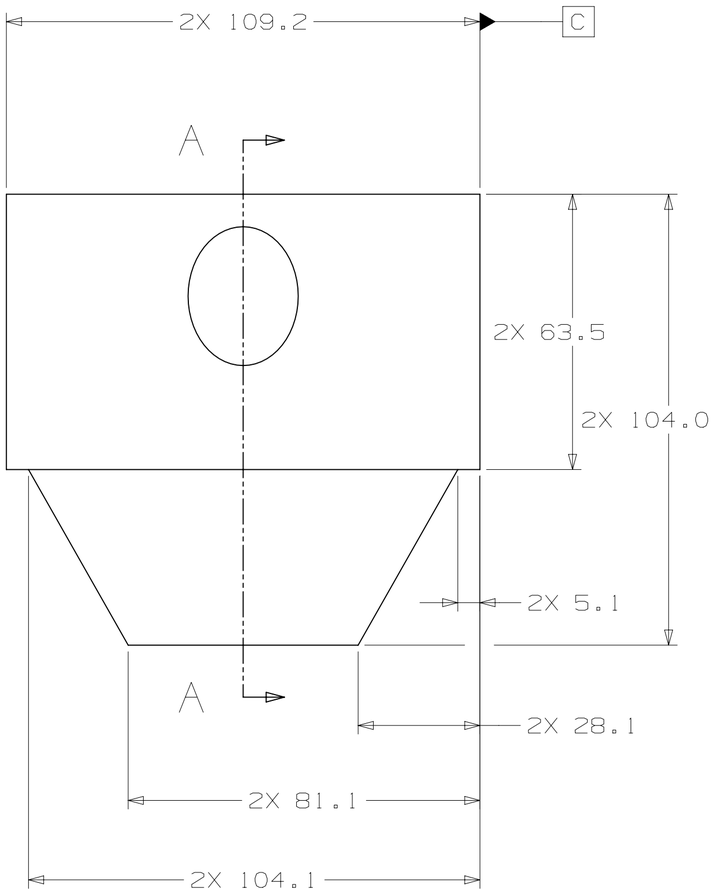

NOTES (UNLESS OTHERWISE SPECIFIED):

1. PART MUST BE FREE OF DIRT, GREASE, OIL & CHIPS.
2. PART TO BE FREE OF ALL SHARP EDGES, CORNERS, AND BURRS.
3. TRAILING ZEROS ON DIMANSIONS DENOTE TOLERANCE

UNLESS OTHERWISE SPECIFIED				
±X	±X.X	±X.XX	±X/X	±X°
--	0.3	--	N/A	1°

BREAK ALL SHARP EDGES .015 MAX.
DO NOT SCALE DRAWING
DIMENSIONS BASED ON ASME Y14.5M-1994
MAX. ALL MACH SURFACES 1.6
DRAWING UNITS: MM

DRAWN	N.TANOVIC	DATE	31-Jul-2012
CHECKED		DATE	
APPROVED		DATE	
USED ON			
MATERIAL	VANADIUM PERMENDUR OR EQUIVALENT		
GROUP: Technical Division Design and Drafting		CAGE CODE: 0U5R6	

FERMI NATIONAL ACCELERATOR LABORATORY
UNITED STATES DEPARTMENT OF ENERGY

NAME: POLES

SCALE	SIZE	DRAWING NUMBER	SHEET	REV
1:1 AS SHOWN	A2	F10001620	1 OF 1	-