DESCRIPTION: PLATE, STRUCTURE SUPPORT
CATEGORY: PLATE PROJECT: ProjectXInjectorExperiment

REV	REVISION CONTROL DOCUMENT	DATES	SIGNATURES	
-	F10001725---RCD		DRAWN	
			APPROVED	

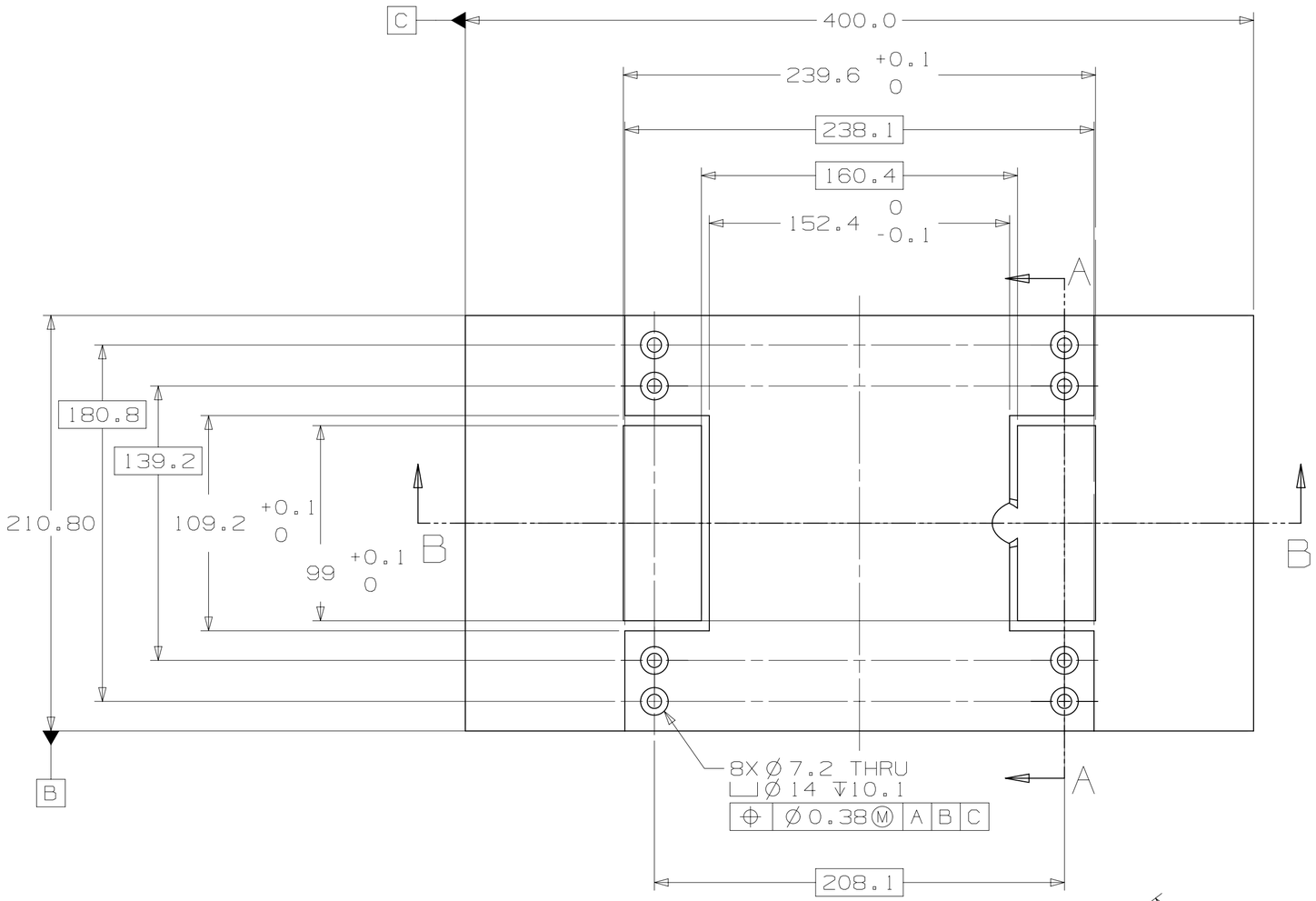

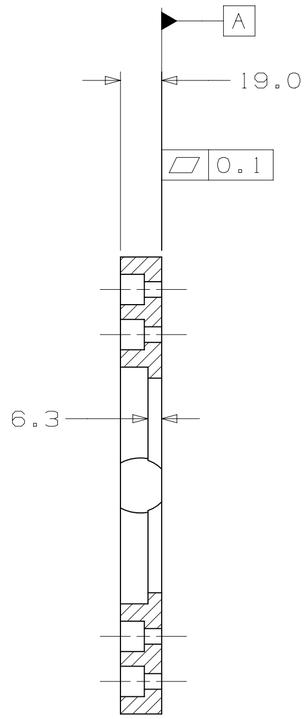

SECTION A - A

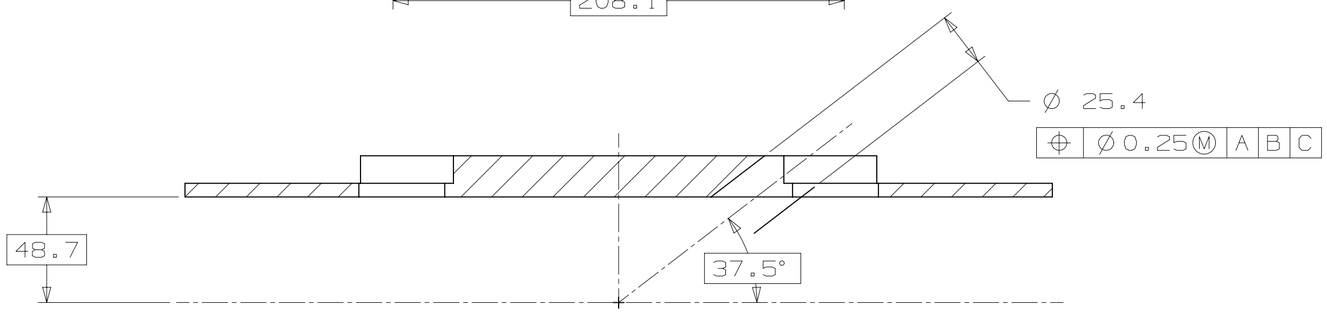

SECTION B - B

NOTES (UNLESS OTHERWISE SPECIFIED):

1. PART MUST BE FREE OF DIRT, GREASE, OIL & CHIPS.
2. PART TO BE FREE OF ALL SHARP EDGES, CORNERS, AND BURRS.
3. TRAILING ZEROS ON DIMENSIONS DENOTE TOLERANCE

UNLESS OTHERWISE SPECIFIED				
±X	±X.X	±X.XX	±X/X	±X°
--	0.3	0.12	N/A	1°

BREAK ALL SHARP EDGES .015 MAX.
DO NOT SCALE DRAWING
DIMENSIONS BASED ON ASME Y14.5M-1994
MAX. ALL MACH SURFACES 3.2
DRAWING UNITS: MM

DRAWN	N.TANOVIC	DATE	22-Aug-2012
CHECKED		DATE	
APPROVED		DATE	
USED ON	F10001757		
MATERIAL	304 STAINLESS STEEL, UNS S30400		
GROUP: Technical Division Design and Drafting		CAGE CODE: 0U5R6	

FERMI NATIONAL ACCELERATOR LABORATORY
UNITED STATES DEPARTMENT OF ENERGY

NAME
PLATE, STRUCTURE SUPPORT

SCALE	SIZE	DRAWING NUMBER	SHEET	REV
1:2 AS SHOWN	A2	F10001725	1 OF 1	-