DESCRIPTION: BLOCK, MIDDLE SIDE UPPER MAGNET
CATEGORY: BLOCK PROJECT: ProjectXInjectorExperiment

REV	REVISION CONTROL DOCUMENT	DATES	SIGNATURES	
-	F10001754---RCD		DRAWN	
			APPROVED	

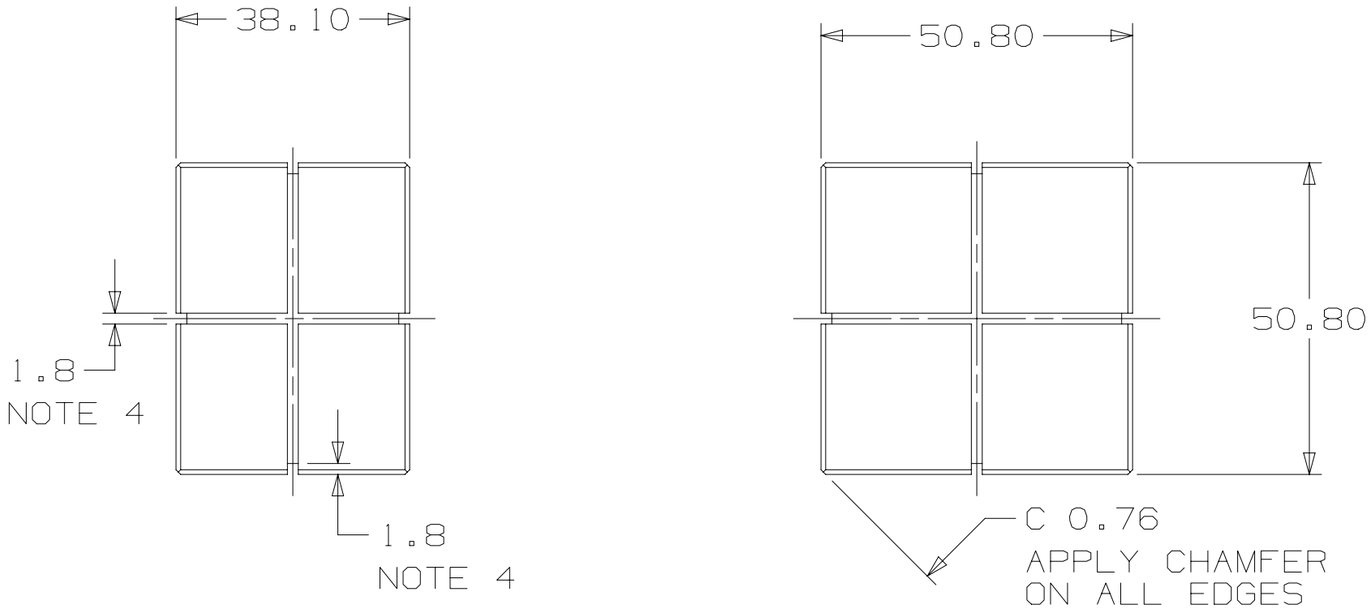

NOTES (UNLESS OTHERWISE SPECIFIED):

1. PART MUST BE FREE OF DIRT, GREASE, OIL & CHIPS.
2. PART TO BE FREE OF ALL SHARP EDGES, CORNERS, AND BURRS.
3. TRAILING ZEROS ON DIMENSIONS DENOTE TOLERANCES.
4. APPLY GROOVE (1.8 X 1.8) ON EACH FACE IN THE FORM OF A CROSS AS SHOWN.

UNLESS OTHERWISE SPECIFIED				
±X	±X.X	±X.XX	±X/X	±X°
--	0.3	0.12	N/A	1°

BREAK ALL SHARP EDGES .015 MAX.
DO NOT SCALE DRAWING
DIMENSIONS BASED ON ASME Y14.5M-1994
MAX. ALL MACH SURFACES 3.2
DRAWING UNITS: MM

DRAWN	N.TANOVIC	DATE	23-Aug-2012
CHECKED		DATE	
APPROVED		DATE	

USED ON
F10001726

MATERIAL 6061-T6 ALUMINUM, UNS A96061

GROUP: Technical Division Design and Drafting CAGE CODE: 0U5R6

FERMI NATIONAL ACCELERATOR LABORATORY
UNITED STATES DEPARTMENT OF ENERGY

NAME
BLOCK, MIDDLE SIDE UPPER MAGNET

SCALE	SIZE	DRAWING NUMBER	SHEET	REV
1:1 AS SHOWN	A3	F10001754	1 OF 1	-