DESCRIPTION: POLES AND MAGNET ASSY
CATEGORY: ASSEMBLY PROJECT: ProjectXInjectorExperiment

REV	REVISION CONTROL DOCUMENT	DATES	SIGNATURES	
-	F10001756---RCD		DRAWN	
			APPROVED	

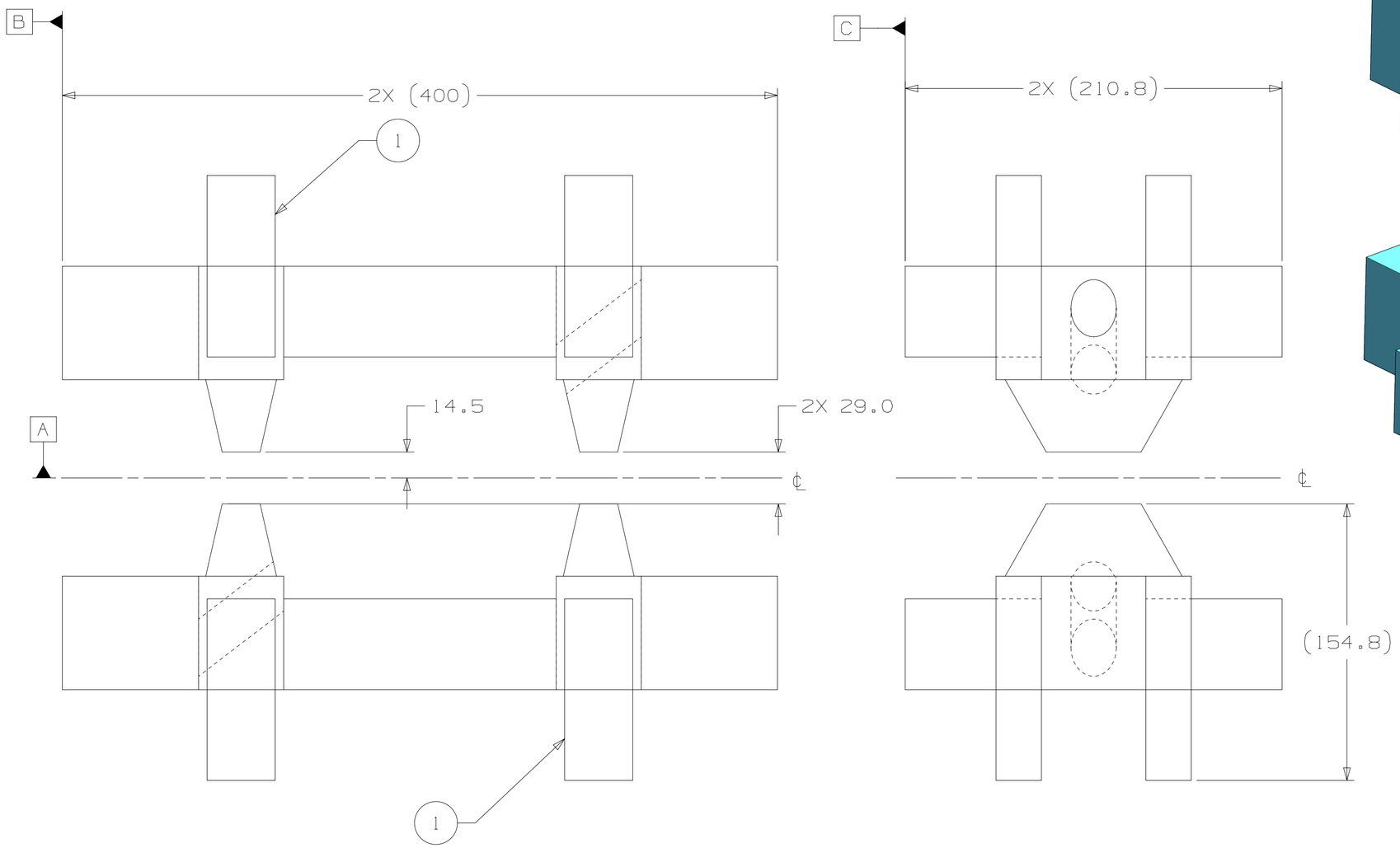

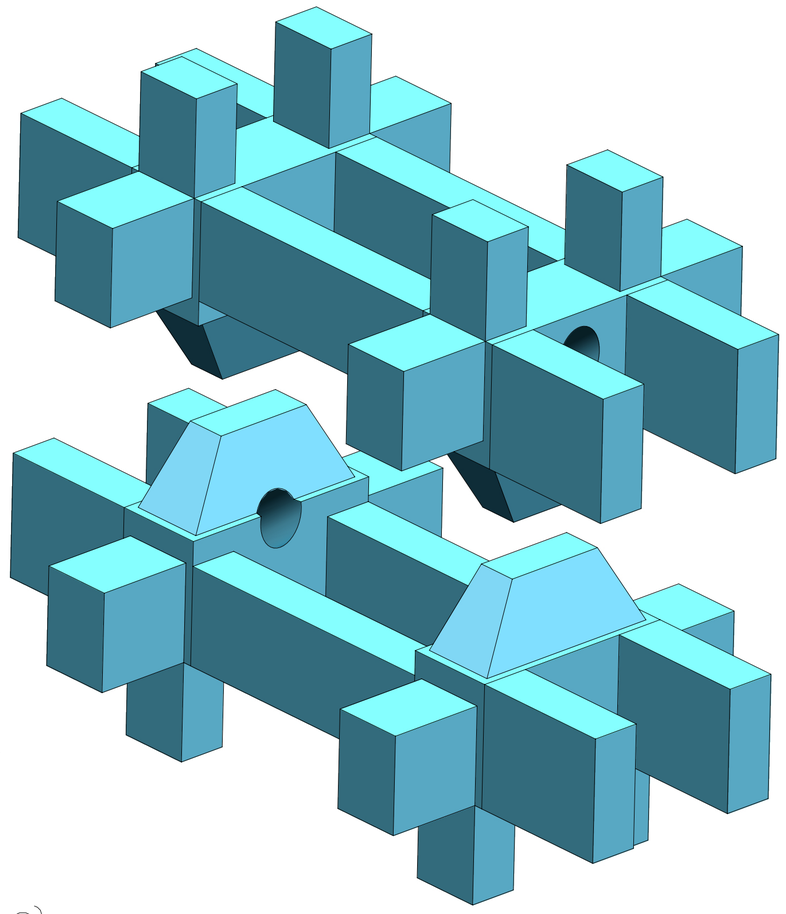

ITEM	PART NUMBER	DESCRIPTION	QTY
1	F10001619	POLES AND MAGNET	2

PART LIST

NOTES (UNLESS OTHERWISE SPECIFIED):

1. PART MUST BE FREE OF DIRT, GREASE, OIL & CHIPS.
2. PART TO BE FREE OF ALL SHARP EDGES, CORNERS, AND BURRS.
3. TRAILING ZEROS ON DIMENSIONS DENOTE TOLERANCES.

UNLESS OTHERWISE SPECIFIED				
±X	±X.X	±X.XX	±X/X	±X°
--	0.3	--	N/A	1°

BREAK ALL SHARP EDGES .015 MAX.
DO NOT SCALE DRAWING
DIMENSIONS BASED ON ASME Y14.5M-1994
MAX. ALL MACH SURFACES 1.6
DRAWING UNITS: MM

DRAWN	N.TANOVIC	DATE	22-Aug-2012
CHECKED		DATE	
APPROVED		DATE	

USED ON: F10001757

MATERIAL: SEE PARTS LIST

GROUP: Technical Division Design and Drafting | CAGE CODE: 0U5R6

FERMI NATIONAL ACCELERATOR LABORATORY
UNITED STATES DEPARTMENT OF ENERGY

NAME: POLES AND MAGNET ASSY

SCALE	SIZE	DRAWING NUMBER	SHEET	REV
1:2 AS SHOWN	A2	F10001756	1 OF 1	-