DESCRIPTION: BLOCK, END UPPER MAGNET W/HOLE
CATEGORY: BLOCK PROJECT: ProjectXInjectorExperiment

| REV | REVISION CONTROL DOCUMENT | DATES | SIGNATURES | |
|---|---|---|---|---|
| - | F10002143---RCD | | DRAWN | |
| | | | APPROVED | |

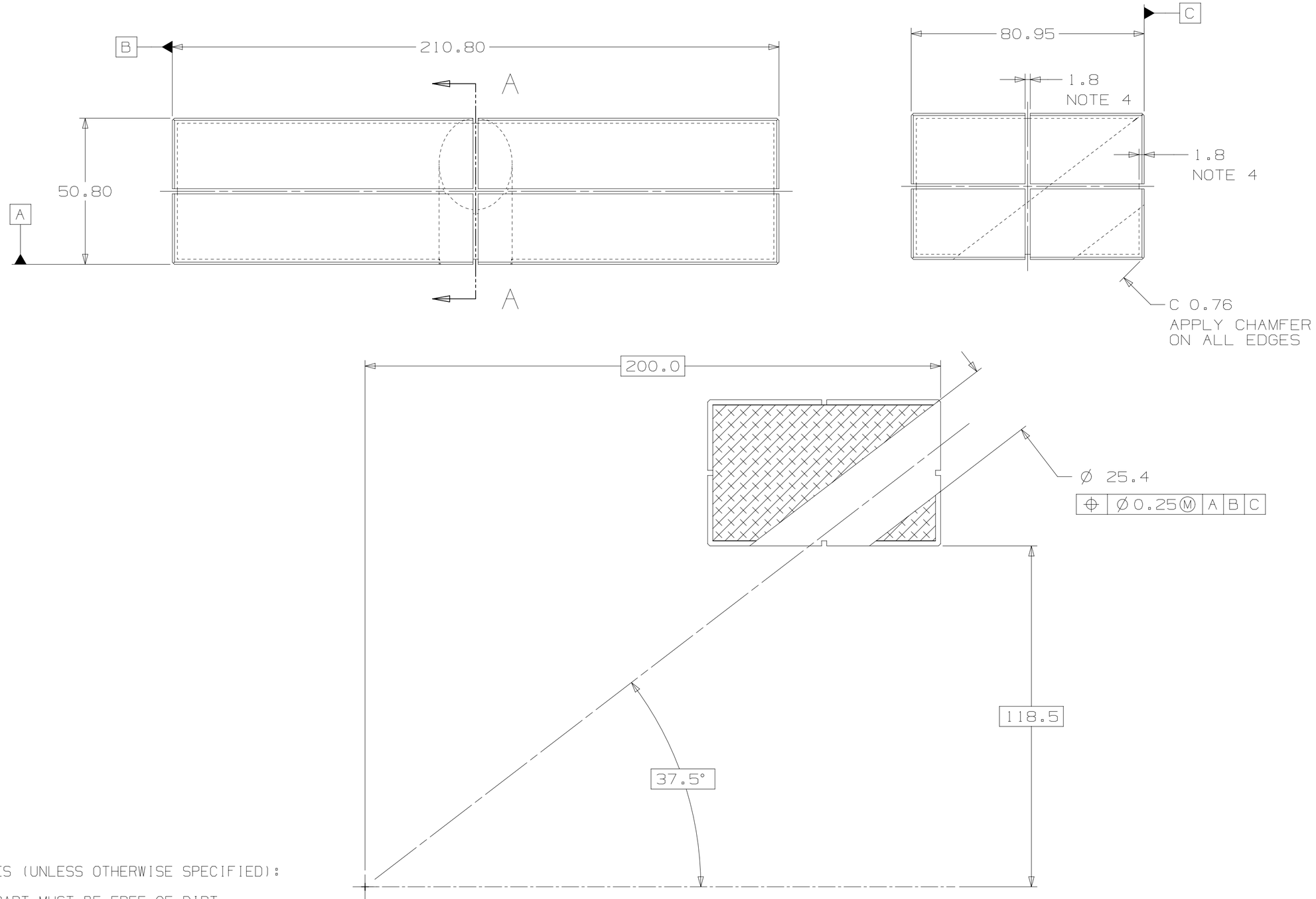


SECTION A - A

NOTES (UNLESS OTHERWISE SPECIFIED):

1. PART MUST BE FREE OF DIRT, GREASE, OIL & CHIPS.
2. PART TO BE FREE OF ALL SHARP EDGES, CORNERS, AND BURRS.
3. TRAILING ZEROS ON DIMENSIONS DENOTE TOLERANCES.
4. APPLY GROOVE (1.8 X 1.8) ON EACH FACE IN THE FORM OF A CROSS AS SHOWN.

| UNLESS OTHERWISE SPECIFIED | | | | |
|---|---|---|---|---|
| ±X | ±X.X | ±X.XX | ±X/X | ±X° |
| -- | 0.3 | 0.12 | N/A | 1° |

BREAK ALL SHARP EDGES .015 MAX.
DO NOT SCALE DRAWING
DIMENSIONS BASED ON ASME Y14.5M-1994
MAX. ALL MACH SURFACES 3.2
DRAWING UNITS: MM

| | | | |
|---|---|---|---|
| DRAWN | N.TANOVIC | DATE | 11-Oct-2012 |
| CHECKED | | DATE | |
| APPROVED | | DATE | |

USED ON F10001726

MATERIAL 6061-T6 ALUMINUM, UNS A96061

GROUP: Technical Division Design and Drafting CAGE CODE: 0U5R6

FERMI NATIONAL ACCELERATOR LABORATORY
UNITED STATES DEPARTMENT OF ENERGY

NAME BLOCK, END UPPER MAGNET W/HOLE

| SCALE | SIZE | DRAWING NUMBER | SHEET | REV |
|---|---|---|---|---|
| 1:1 AS SHOWN | A2 | F10002143 | 1 OF 1 | - |